

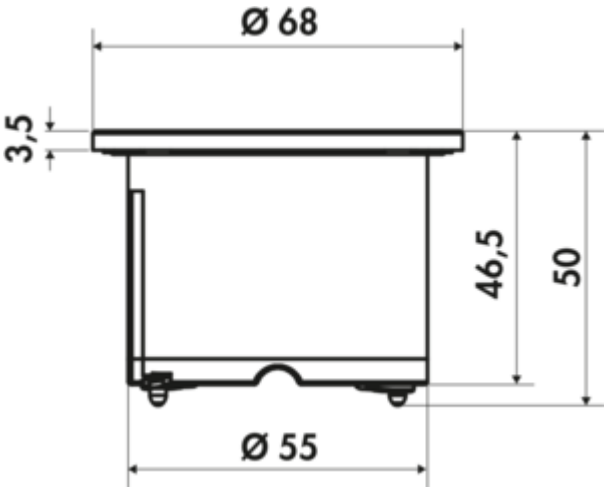

Pix single socket

Product number: 7053088
Configuration: with Swiss socket

Configuration options
7053074 | with two-pin earthed plug
7053087 | with Belgian/French socket
7053088 | with Swiss socket

✓ Built-in socket element
✓ 1 x with Swiss socket
✓ round

Socket element, 1-fold. Ornamental ring stainless steel coloured, black and white. For installation in worktop, front panel or side wall.
— drill Ø 56 mm
— installation depth ca. 45 mm
— 2000 mm mains connection line with earthing contact plug enclosed loosely (permanently installed in swiss version)
— cable outlet back

CE

more infos...

Technical data

Article type	Socket element
Height	3,5 mm
Drilling diameter	56 mm
Width	68 mm
Cable outlet	cable outlet back
Mounting/Fixing	installation front panel side wall in the worktop
Certification	CE
Diameter	68 mm

Shape	round
Length of the supply line (primary)	2.000 mm
Installation depth	50 mm
Version sockets	1 x with Swiss socket
Colour socket	black
Type of socket element	Built-in socket element
Number of sockets (total)	1
Touch protection ("child safety lock")	with increased contact protection