

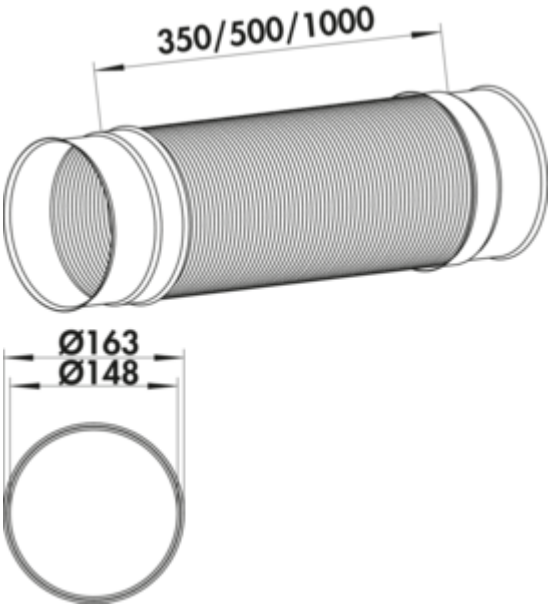

STEEL flow SR-R flex 150 round pipe

Product number: 4061006
Configuration: L 350 mm, aluminium, stainless steel

Configuration options
4061006 | L 350 mm, aluminium, stainless steel
4061007 | L 500 mm, aluminium, stainless steel
4061008 | L 1000 mm, aluminium, stainless steel

✓ Ventilation pipe
✓ plug-in system
Ventilation pipe, flexible.
— Ø 148 mm (connection size inside)
— length can be reduced by approx. 50 % by compression
— can be used for bends (

more infos...

Technical data

Article type	Ventilation pipe
Brand	STEEL flow
Width	350 mm
Material	aluminium
Properties	flexible reducible by compressing
Mounting/Fixing	plug-in system

Note	can be used for, e.g. bends (<90°) or parallel offsetting
Shape	round
Connection diameter	148 mm
System dimension	150
Output drive	round
Ventilation system	COMPAIR STEEL flow® 150

Installation dimensions (PDF)

