

Asta LED

Product number: 7065063
Configuration: L 1500 mm, 23.2 W, black matt

Configuration options

7065050 | L 900 mm, 13.9 W, stainless steel colour
7065051 | L 1200 mm, 18.6 W, stainless steel colour
7065052 | L 1500 mm, 23.2 W, stainless steel colour
7065061 | L 900 mm, 13.9 W, black matt
7065062 | L 1200 mm, 18.6 W, black matt
7065063 | L 1500 mm, 23.2 W, black matt

✓ Pendant light
✓ 4000 K neutral white
✓ 23.2 watts

Pendant light. Aluminium body. Plastic cover, white incl. converter.
— 230 V **(high voltage)**
— max. 84 lumen/watt at **4000 K** neutral white
— suspension max. 1850 mm
— **not dimmable with on-site dimmer**
— without remote control, On/Off function via on-site light switch
This product contains a light source of energy efficiency class G.

more infos...

Technical data

Article type	Luminaire	Housing colour	black matt
Height	26,4 mm	Colour temperature	4000 K neutral white
Width	1.500 mm	Illuminant type	LED
Energy efficiency class	G	Light yield	max. 84 lumen/watt at 4000 K neutral white
Transformer / converter required	Yes, included	Material cover	plastic
Mounting/Fixing	Ceiling mounting	Cover colour	white
Material housing	aluminium	Suspension	1850 mm
Switch	No	Dimmable by on-site dimmer	No
Shape	angular	Design	Pendant light
Illuminant included	Yes	Illuminant power	23.2 watts

Dimensional sketch (PDF)

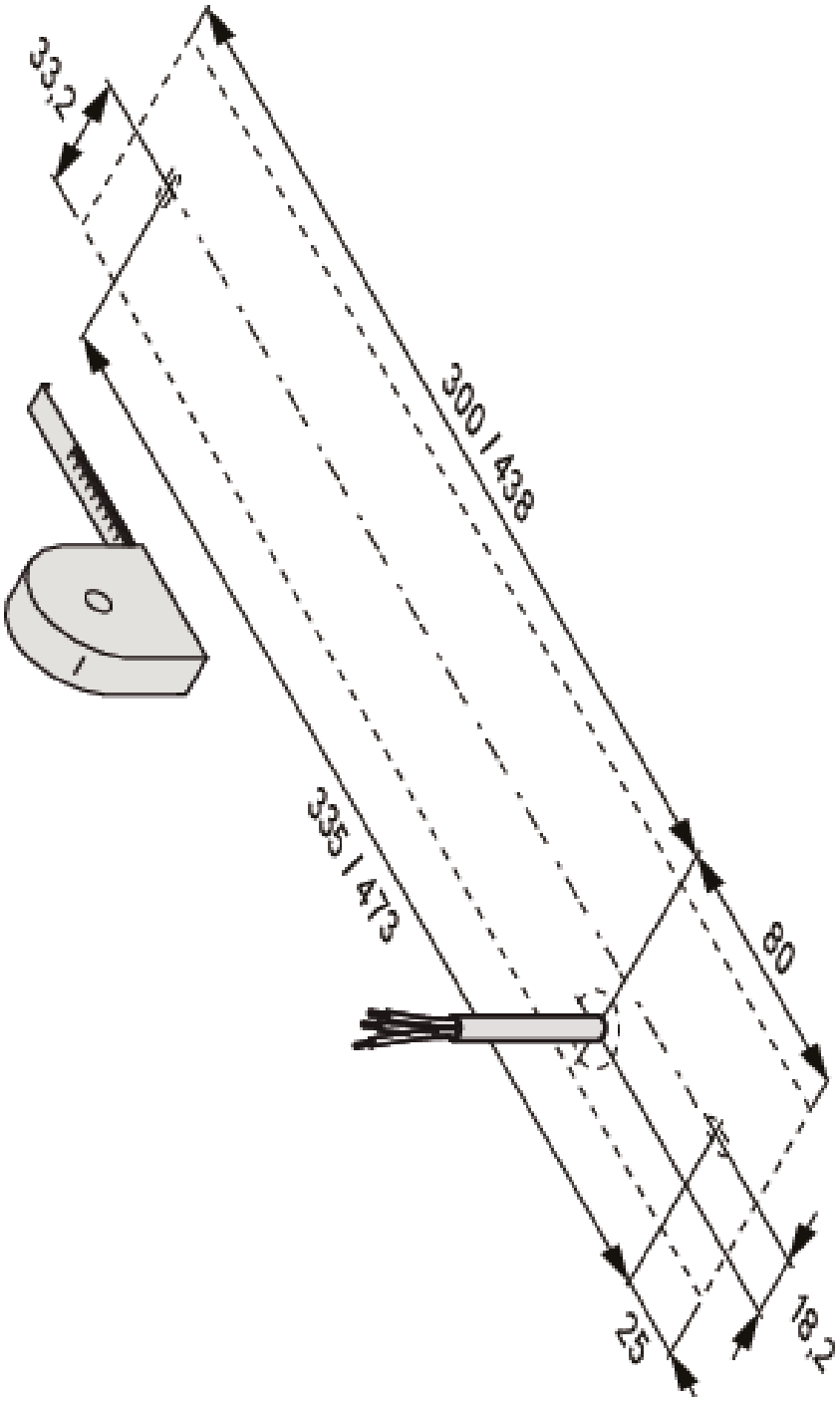

Naber GmbH
Enschedestr. 24
DE-48529 Nordhorn

Tel. +49 5921 704-0
Fax +49 5921 704-140
naber@naber.com