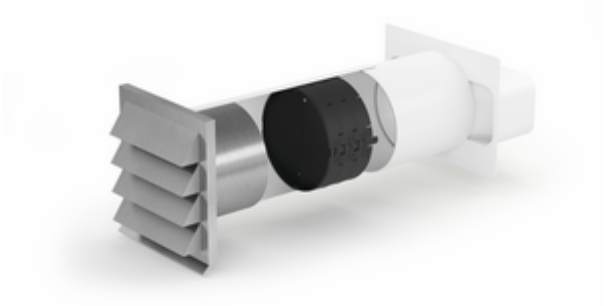

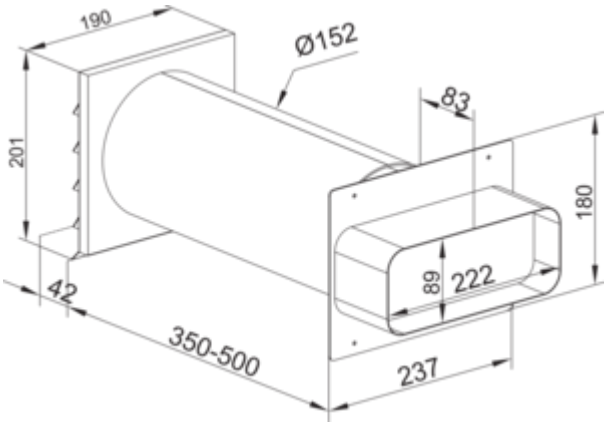

E-Jal flow 150 wall conduct incl. THERMOBOX

Product number: 4043066
Configuration: white, stainless steel

Configuration options
4043066 | white, stainless steel

✓ Wall sleeve
✓ installation in the wall

Wall conduct with telescopic pipe, incl. built-in heat retention system THERMOBOX and **stainless steel external blind E-Jal**.
— pipe connection 227 x 94 mm
— connection depth 80 mm
— installation depth 350–500 mm, can be shortened to 290 mm
— wall penetration Ø ca. 155 mm
— Blower-Door certified (required opening pressure >65 Pa)

more infos...

Technical data

Article type	Wall sleeve
Height	201 mm
Width	190 mm
Material	stainless steel
Properties	can be shortened
Mounting/Fixing	installation in the wall
Certification	stainless
Shortenability	can be shortened to 290 mm
Shape	angular
Outer diameter	150 mm

Support depth	80 mm
Diameter wall opening	155 mm
Connection diameter	150 mm
Installation depth	350–500 mm
Wall box version	wall conduct with telescopic pipe, incl. built-in heat retention system THERMOBOX and stainless steel external E-Jal
Pipe socket dimension	pipe connector 227 x 94 mm
System dimension	150
Output drive	angular
Ventilation system	COMPAIR flow 150
Opening pressure	> 65 Pa

Dimensional sketch (PDF)

