

Worktop fastening bracket

Product number: 1111119
Configuration: L 535 mm, white

Configuration options
1111119 | L 535 mm, white

✓ Connecting materials
Supporting bracket for kitchen worktops.

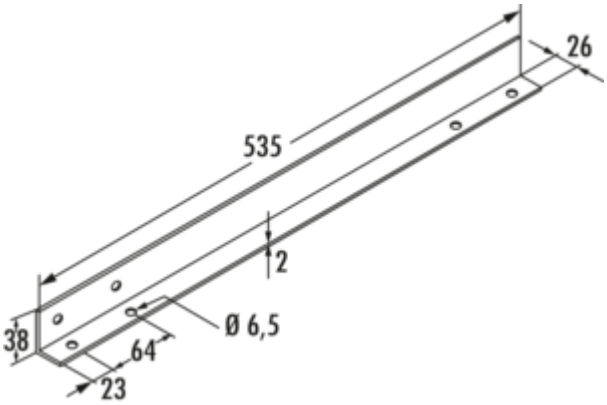

more infos...

Technical data

Article type	Connecting materials	Diameter hole bore	6,5 mm
Width	535 mm	Thigh dimensions	38 x 26 mm

Naber GmbH
Enschedestr. 24
DE-48529 Nordhorn

Tel. +49 5921 704-0
Fax +49 5921 704-140
naber@naber.com