

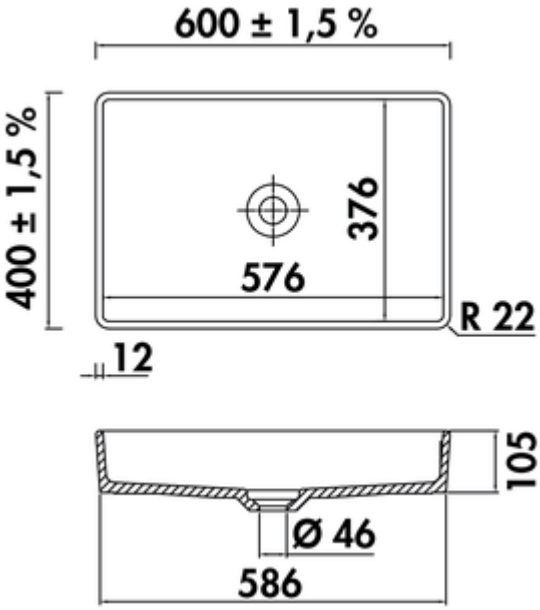

Lavara 60

Product number: 1091110
Configuration: white glossy

Configuration options
1091110 | white glossy
1091111 | slate
1091112 | nero

✓ wash basin
✓ ceramic
✓ incl. drain with ceramic cover

Top mounted washbasin angular. Ceramics.
— incl. drain with ceramic cover
— cut-out approx. 555 x 355 mm
— **bowl can not be closed**

more infos...

Technical data

Article type	Sink	Valve type	bowl can not be closed
Height	105 mm	Installation variant	wash basin
Width	600 mm	Main sink width	576 mm
Material	ceramic	Depth main sink	376 mm
Cut-out dimension	approx. 555 x 355 mm	Armature bench	No
Surface/coating	glossy	Number of sinks	1 main sink
Excenter fitting	incl. drain with ceramic cover	Pelvic inner radius (R)	22

Naber GmbH
Enschedestr. 24
DE-48529 Nordhorn

Tel. +49 5921 704-0
Fax +49 5921 704-140
naber@naber.com

Recommendations

1051026	Pipe odour trap bathroom, Accessory, white
1051052	Washing stand furniture siphon, Siphon, white
1051059	Pipe odour trap, Drain pipe, white
5011285	Glam 1 bathroom, Washbasin tap, chrome, high pressure
5011286	Glam 1 bathroom, Washbasin tap, black matt, high pressure
5011287	Glam 2 bathroom, Washbasin tap, chrome, high pressure
5011288	Glam 2 bathroom, Washbasin tap, black matt, high pressure
5011289	Stile 1 bathroom, Washbasin tap, chrome, high pressure
5011290	Stile 1 bathroom, Washbasin tap, black matt, high pressure
5011291	Stile 2 bathroom, Washbasin tap, chrome, high pressure
5011292	Stile 2 bathroom, Washbasin tap, black matt, high pressure

Naber GmbH
Enschedestr. 24
DE-48529 Nordhorn

Tel. +49 5921 704-0
Fax +49 5921 704-140
naber@naber.com

Dimensional sketch (PDF)

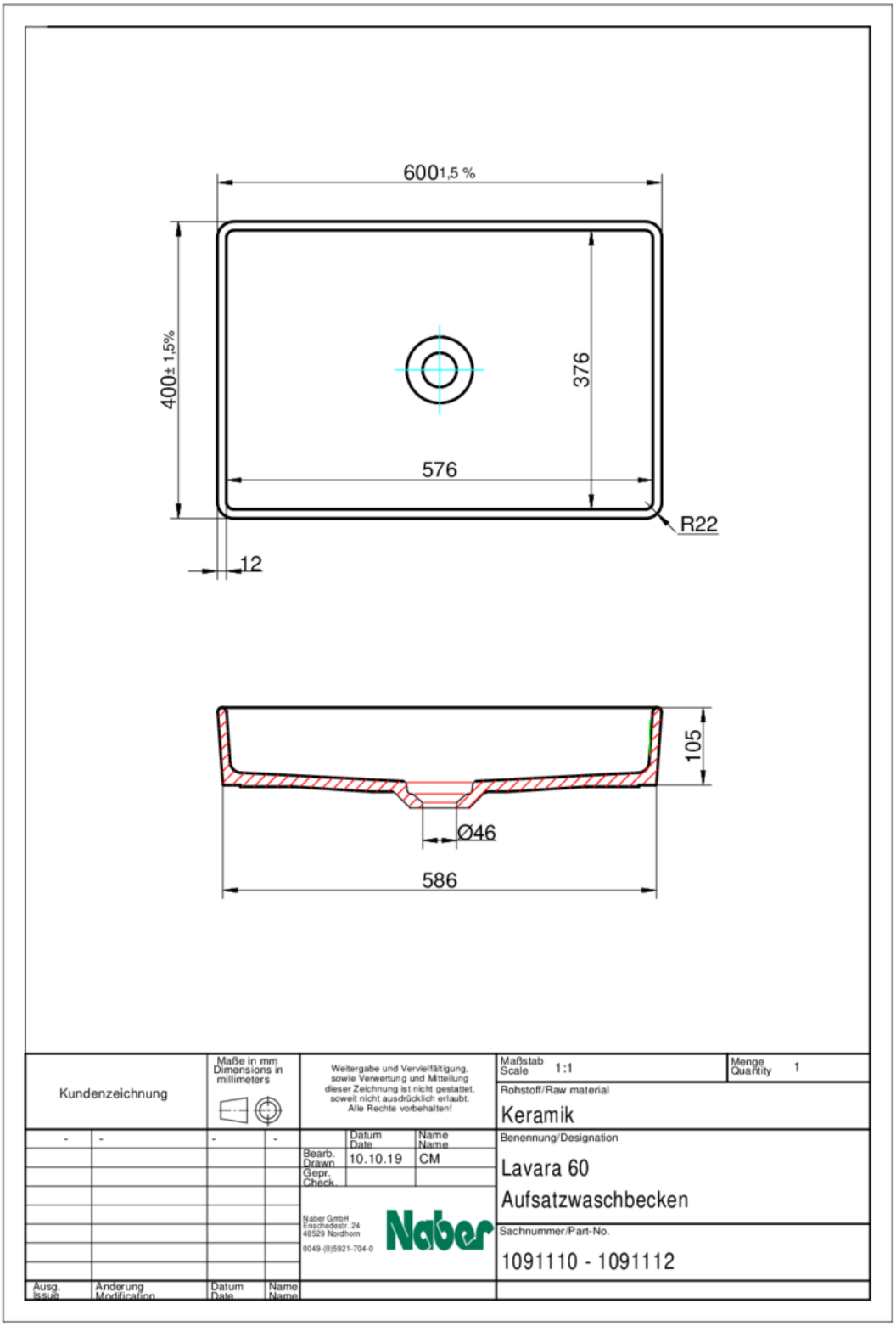

Installation dimensions (PDF)

