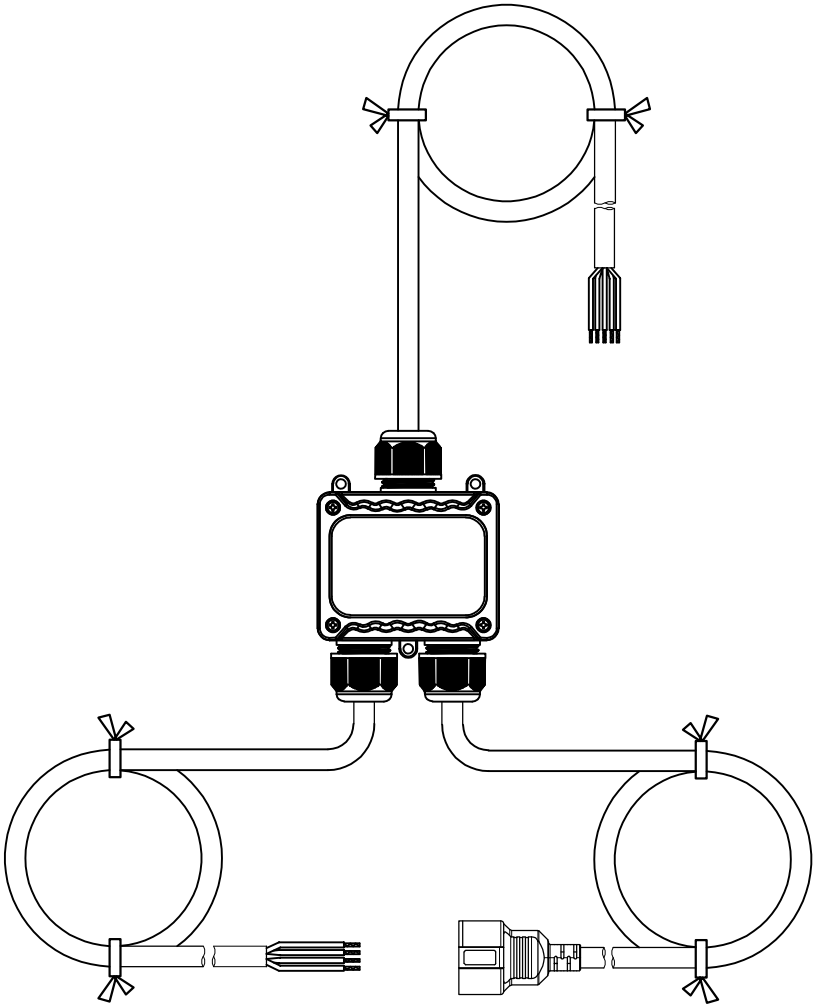

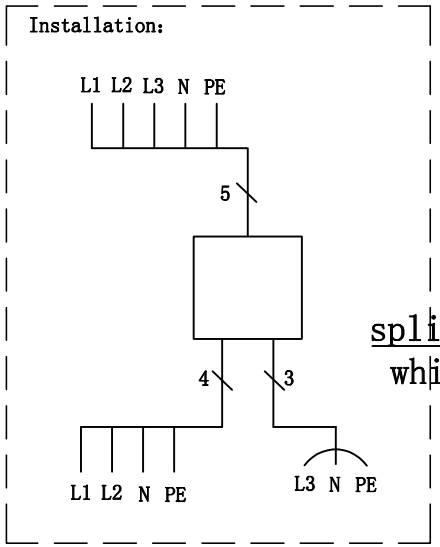
Installation:
L1 L2 L3 N PE
5
4
3
L1 L2 N PE
L3 N PE

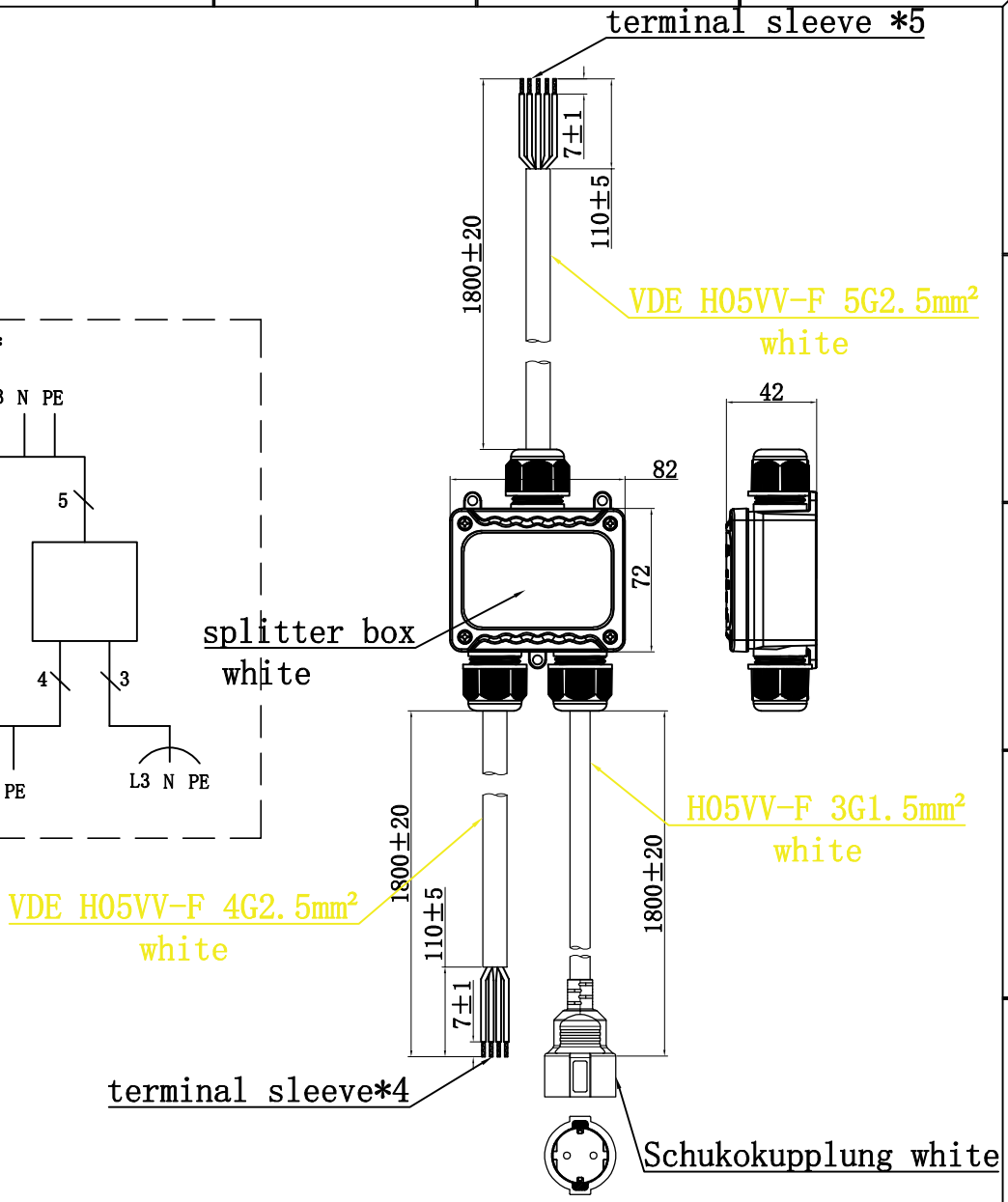
terminal sleeve *5
7±1
110±5
1800±20
VDE H05VV-F 5G2.5mm²
white
42
82
72
splitter box
white
H05VV-F 3G1.5mm²
white
1800±20
VDE H05VV-F 4G2.5mm²
white
110±5
7±1
1800±20
terminal sleeve*4
Schukokupplung white