PORTARE 1

D MONTAGEANLEITUNG
F INSTRUCTIONS DE MONTAGE
GB INSTALLATION INSTRUCTIONS
NL MONTAGEHANDLEIDING

Naber
MADE IN GERMANY

Naber GmbH
Enschedestr. 24, 48529 Nordhorn
naber@naber.com

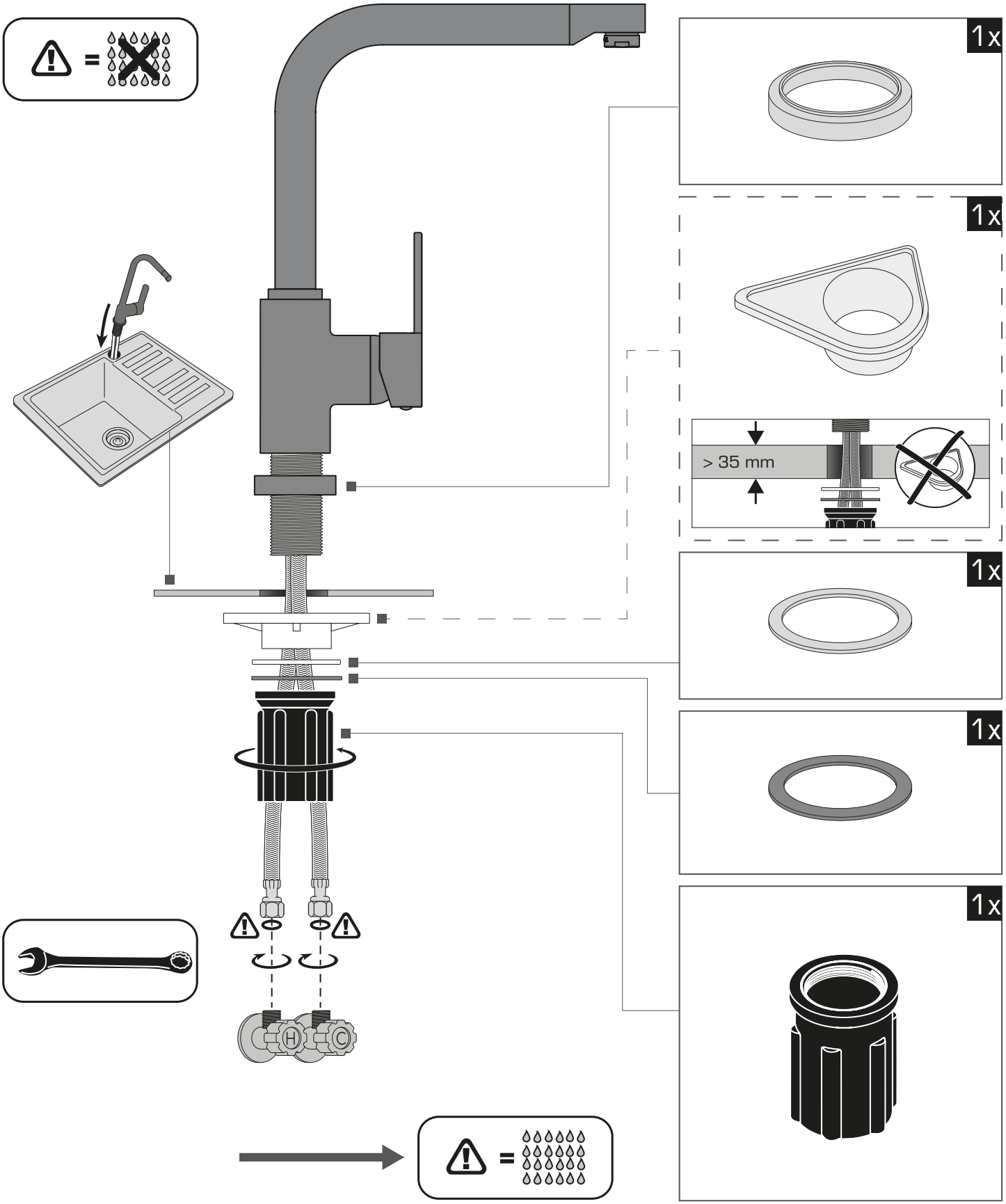

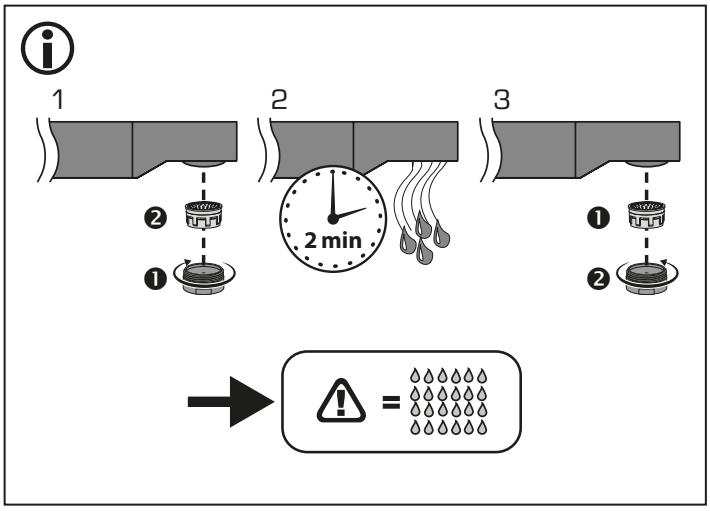

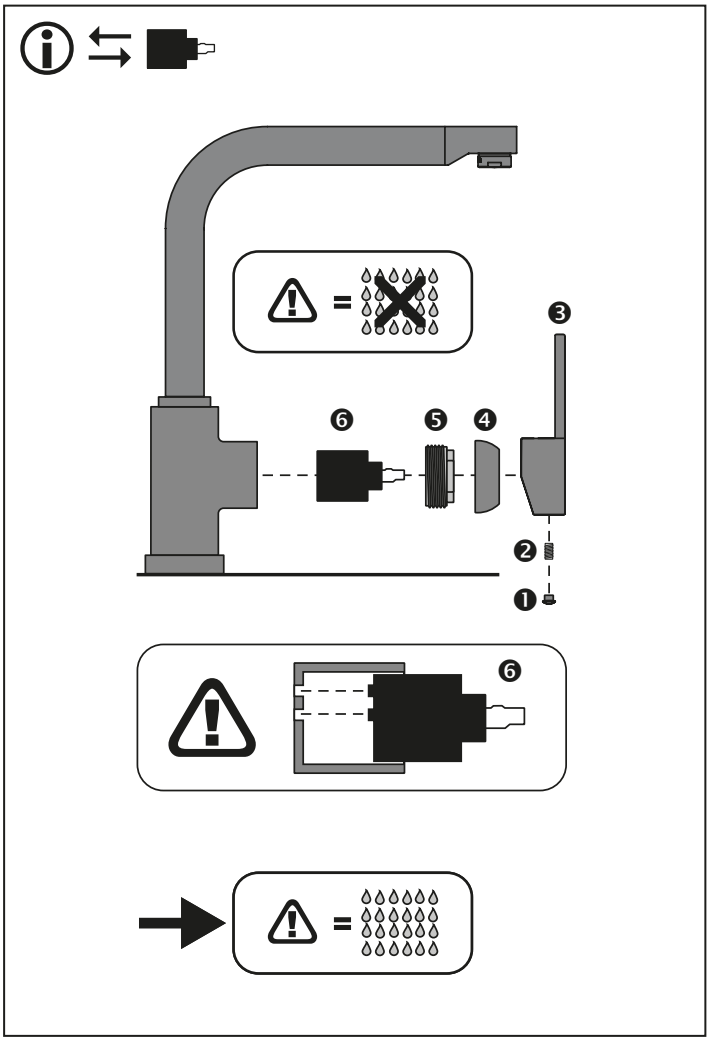

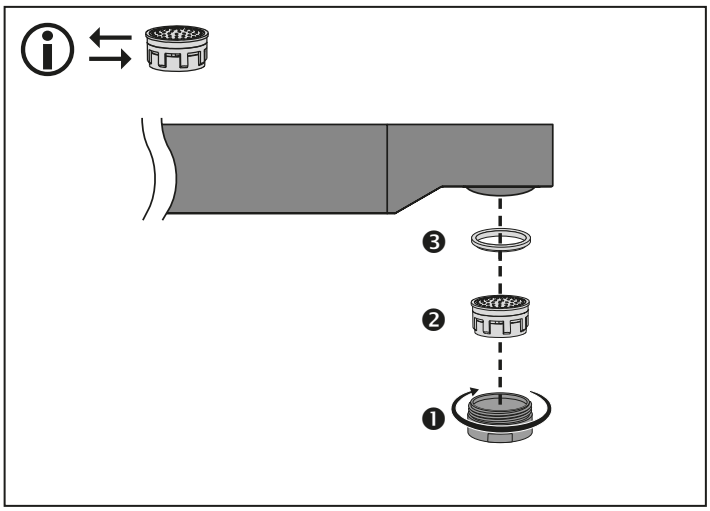

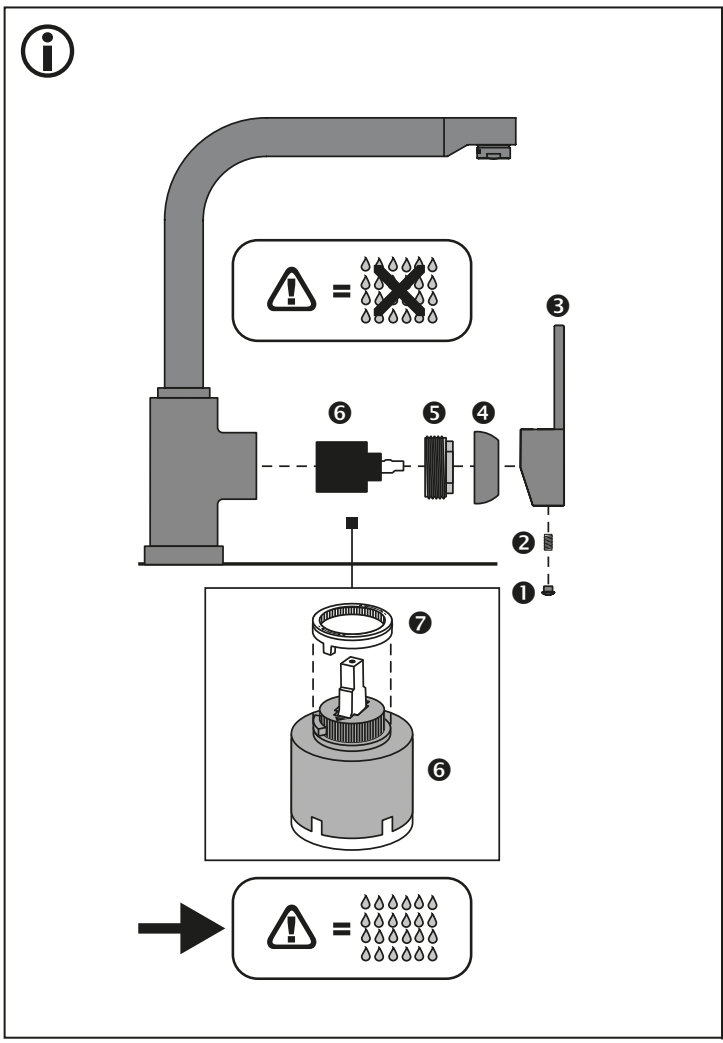

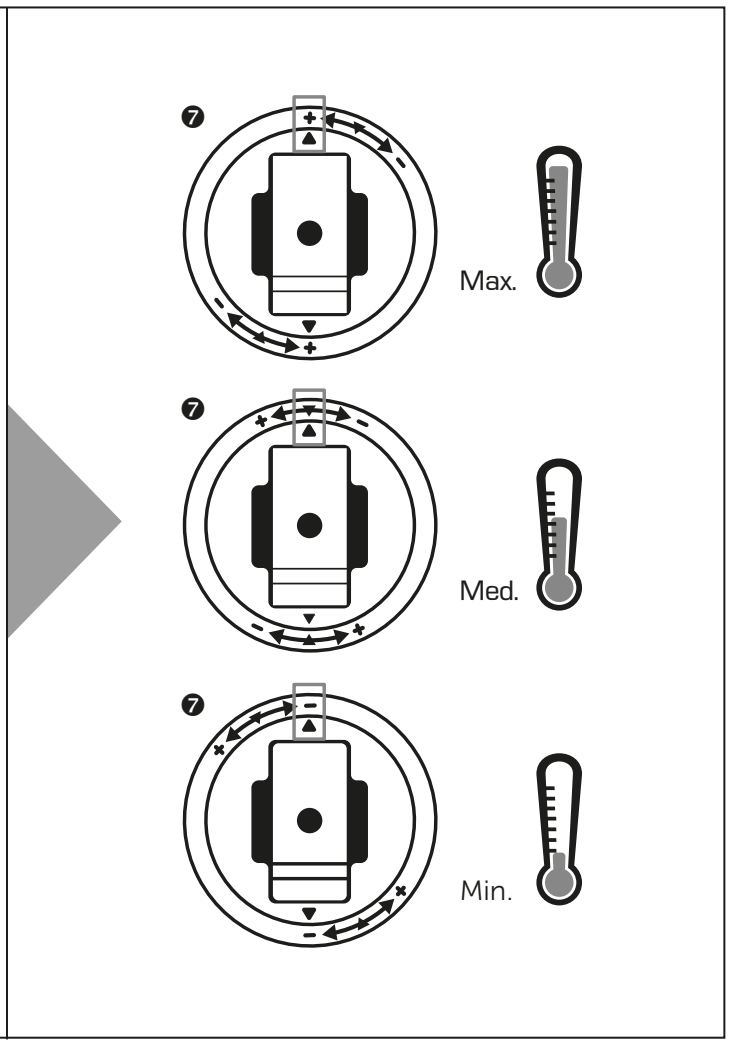

10955017-02_MA-70052X-N_SP_0121