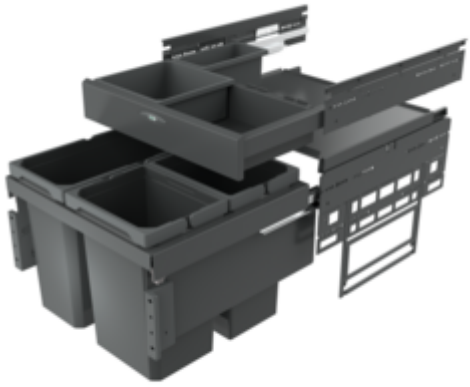

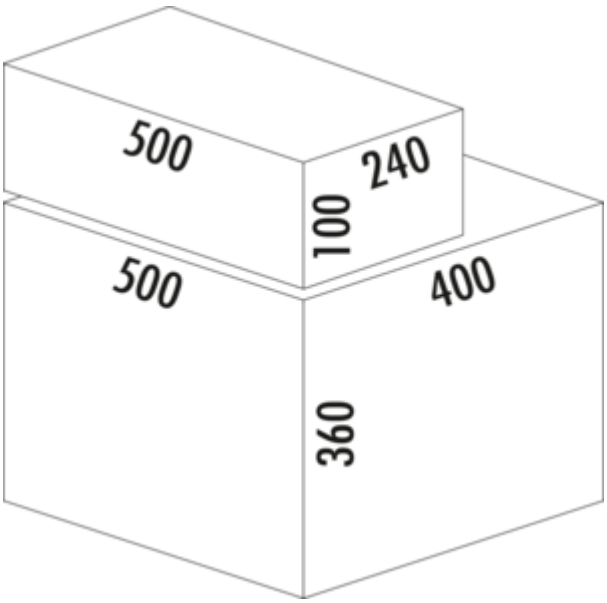


# Cox® Base 360 S/500-3 with Base-Board

Product number: 8013371
Configuration: without bio lid, anthracite, H 460 mm

**Configuration options**

8012371 | without bio lid, light grey, H 460 mm
8012372 | with bio lid, light grey, H 460 mm
8013371 | without bio lid, anthracite, H 460 mm
8013372 | with bio lid, anthracite, H 460 mm

✓ Front pull-out system
✓ full pull-out
✓ 36 l
— guide rail depth 470 mm
— waste capacity 36 (2 x 10/1 x 16) l
— technology: full pull-out
— fitting: cabinet wall and front panel
— for 16/19 mm side walls
— **with soft retraction and damping**
— **1 x 2.7 l and 1 x 1.2 l storage boxes and 4 brackets included**

**more infos...**

Naber GmbH
Enschedestr. 24
DE-48529 Nordhorn

Tel. +49 5921 704-0
Fax +49 5921 704-140
naber@naber.com

## Technical data

| | |
|---|---|
| Article type | Waste collection system |
| Height | 460 mm |
| Width | 500 mm |
| Mounting/Fixing | cabinet wall<br>front panel |
| Installation_height_list | 460 mm |
| Cabinet width | 500 mm |
| Shape | angular |
| For sidewall thickness | 16/19 mm |
| Installation depth | 400 mm |
| Material container | plastic |
| Number of containers | 2 |
| Opening technology | full pull-out |
| Total volume | 36 l |

| | |
|---|---|
| Volume/content container 1 | 16 l |
| Volume/content container 2 | 10 l |
| Volume/content container 3 | 10 l |
| Soft closing | Yes |
| Design | Front pull-out system |
| Volume/Content container | 16/10/10 |
| Organic lid | No |
| Number of containers in additional drawer | 2 |
| Guide rail depth | 470 mm |
| Volume/capacity drawer container 1 | 2.7 l |
| Volume/capacity drawer container 2 | 1,2 l |
| Locking mechanism | With damper |

## Spare Parts

| | |
|---|---|
| 8011178 | Bio-filter retrofitting set, Accessory, black |
| 8012320 | Cox® system container, Single bucket, light grey, 10 l |
| 8012321 | Cox® system container, Single bucket, light grey, 16 l |
| 8010145 | Complete lid, Accessory, silver |
| 8012362 | Storage box, Utensil box, dark grey, 2.7 l |
| 8013362 | Storage box, Utensil box, anthracite, 2.7 l |
| 8012363 | Storage box, Utensil box, dark grey, 1.2 l |
| 8013363 | Storage box, Utensil box, anthracite, 1.2 l |
| 8012364 | Bracket for storage box, Accessory, silver |

Naber GmbH
Enschedestr. 24
DE-48529 Nordhorn

Tel. +49 5921 704-0
Fax +49 5921 704-140
naber@naber.com

## Dimensional sketch (PDF)

