

K-Jal 150 external blind

Product number: 4044065
Configuration: anthracite

Configuration options
4044044 | white
4044046 | brick red
4044064 | light grey
4044065 | anthracite

✓ External blind
190 x 190 mm, with backpressure shutter for connection to round pipes.
— Ø 150 mm
— connector depth 71 mm

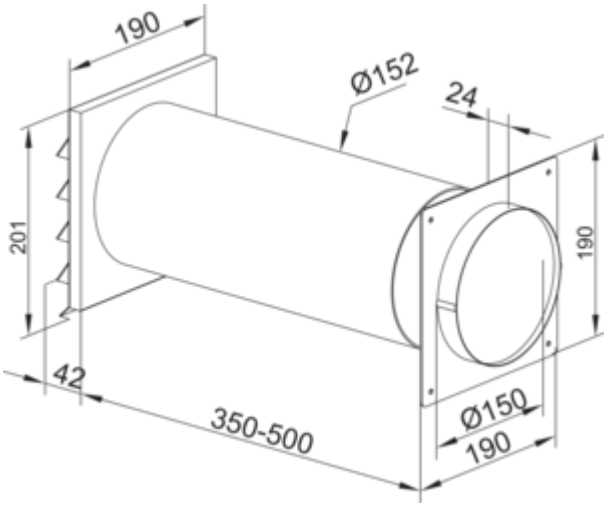

more infos...

Technical data

Article type	External blind
Height	190 mm
Width	190 mm
Material	Polystyrene
Shape	angular
Support depth	72.5 mm

Connection diameter	150 mm
Blind version	with backpressure shutter for connection to round pipe
System dimension	150
Output drive	round
Ventilation system	COMPAIR flow 150

Naber GmbH
Enschedestr. 24
DE-48529 Nordhorn

Tel. +49 5921 704-0
Fax +49 5921 704-140
naber@naber.com

Dimensional sketch (PDF)

