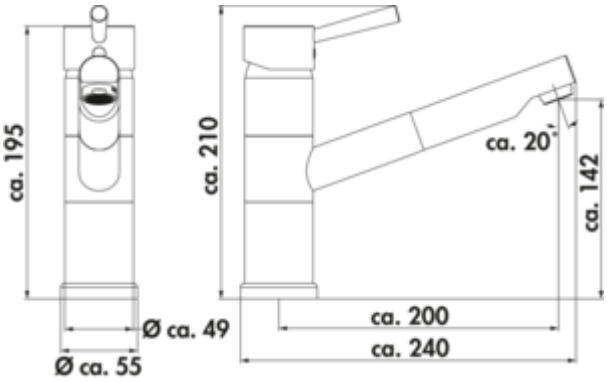


# LINEA Glacier 2

Product number: 5011071
Configuration: stainless steel coloured, high pressure

**Configuration options**
5011071 | stainless steel coloured, high pressure

✓ Sink faucet
✓ high pressure
✓ with swivelling/pull-out

Single lever faucet with **swivelling/pullout** outlet, ceramic cartridge, **ECO function** (CLICK cartridge) and **scald protection**.
— swivel range 90°
— drill Ø 35 mm
— corresponds to the German and European drinking water regulation/directive




more infos...

## Technical data

| | | | |
|---|---|---|---|
| Article type | Sink faucet | Cartridge with ceramic sealing discs | Yes |
| Brand | LINEA | Swivel range outlet | 90° |
| Number of handles | 1 | Type of fitting | Single lever faucet |
| Total installation height | 210 mm | Operating pressure | high pressure |
| Height | 210 mm | Width | 55 mm |
| Outreach | 200 mm | Material | brass |
| Outlet | with swivelling/pull-out | Number of tap holes | 1 |
| Discharge height | 142 mm | ECO function | CLICK cartridge |
| Operating mode | Lever | Temperature limiter/scald protection | scald protection |
| Drilling diameter | 35 mm | Angle of inclination of aerator | 20 ° |
| Handle position | side lever | Max. Flow rate at 3 bar | 8,4 l/min |