

WESCO® Profiline Trio-Master® 410 S/400-3

Product number: 8012078
Configuration: with bio lid, anthracite

Configuration options
8012078 | with bio lid, anthracite

- ✓ Pull-out technology for rotating doors
- ✓ full pull-out
- ✓ 40 l
- — waste capacity 40 (1 x 20/2 x 10) l
- — technology: full pull-out
- — frame/guide silver
- — complete lid anthracite
- — fitting: cabinet bottom
- — **the ideal space saver with an installation height of only 410 mm**

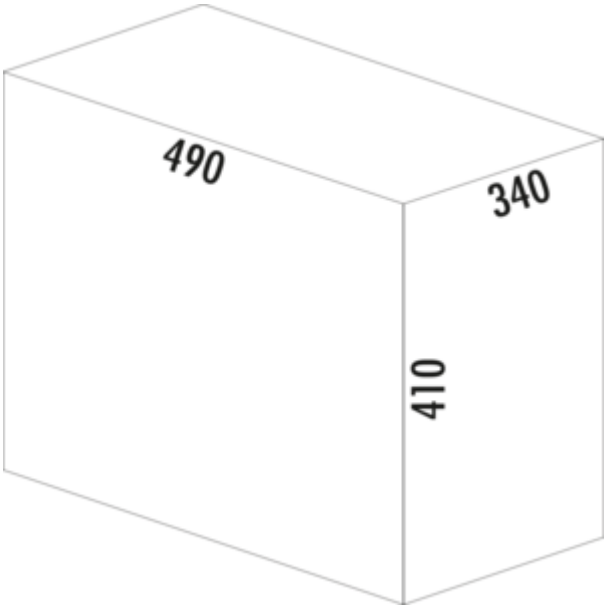

more infos...

Technical data

Article type	Waste collection system	Cover	Yes
Brand	WESCO®	Lid type(s)	Complete lid
Height	410 mm	Number of containers	3
Width	340 mm	Opening technology	full pull-out
Mounting/Fixing	cabinet bottom	Total volume	40 l
Installation_height_list	410 mm	Volume/content container 1	20 l
Cabinet width	400 mm	Volume/content container 2	10 l
Shape	angular	Volume/content container 3	10 l
Frame colour	silver	Colour guide	silver
Installation depth	490 mm	Colour container lid	green
Material lid	plastic	Design	Pull-out technology for rotating doors
Material container	plastic	Volume/Content container	20/10/10
Colour total cover	anthracite	Organic lid	Yes

Spare Parts

8010099	Wire hanger bucket, Single bucket, anthracite, 20 l
8010095	Wire hanger bucket, Single bucket, anthracite, 10 l
8010093	Complete Lid, Lid, anthracite
8010003	Bio-lid, Lid, green, for 7/ 8/ 10 l
8011489	Closing-lid, Accessory, anthracite, for 15/16/17/20 l

Naber GmbH
Enschedestr. 24
DE-48529 Nordhorn

Tel. +49 5921 704-0
Fax +49 5921 704-140
naber@naber.com

Dimensional sketch (PDF)

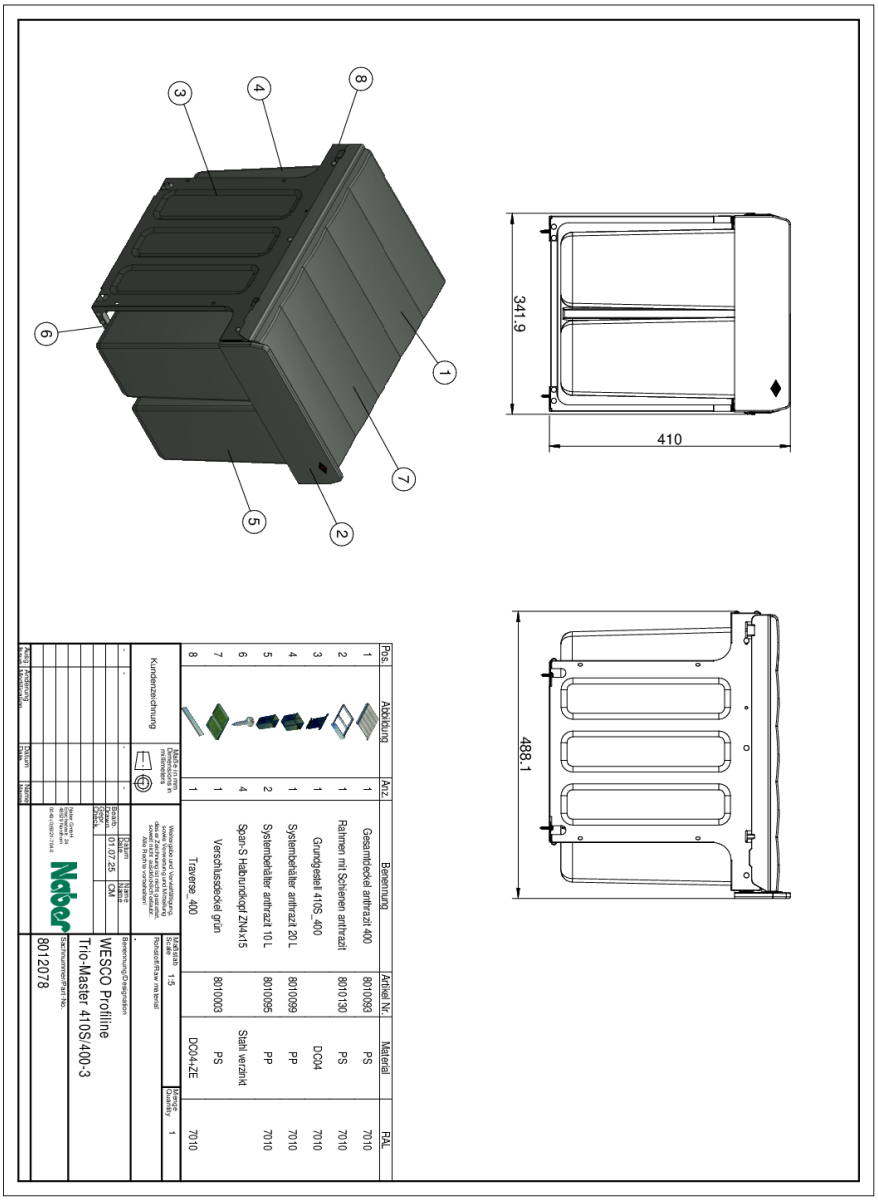

Pos.	Abbildung	Anz.	Benennung	Artikel Nr.	Material	RAL
1		1	Gesamtdeckel anthrazit 400	8010083	PS	7010
2		1	Rahmen mit Schienen anthrazit	8010130	PS	7010
3		1	Grundgestell 410S_400		DC04	7010
4		1	Systembehälter anthrazit 20 L	8010099	PP	7010
5		2	Systembehälter anthrazit 10 L	8010095	PP	7010
6		4	Span-S Halbrundkopf ZN4x15		Stahl verzinkt	
7		1	Verschlussdeckel grün	8010003	PS	7010
8		1	Traverse_400		DC04-ZE	

Kundenzeichnung

Maße in mm / Dimensions in millimeters

Maßstab / Scale 1:5

Roh-/Fertigteil / Raw material

Benennung/Zeichnungsnummer

Bearb. / Drawn: Hübsch 01.07.25

Gepr. / Checked: Naber CM

Name / Name

Datum / Date

Änderung / Modification

Index / Index

Bearb. / Quantity 1

Naber GmbH
Enschedestr. 24
48527 Nordhorn
Germany

WESCO Profiline
Trio-Master 410S400-3

Sachnummer/Part No.
80112078