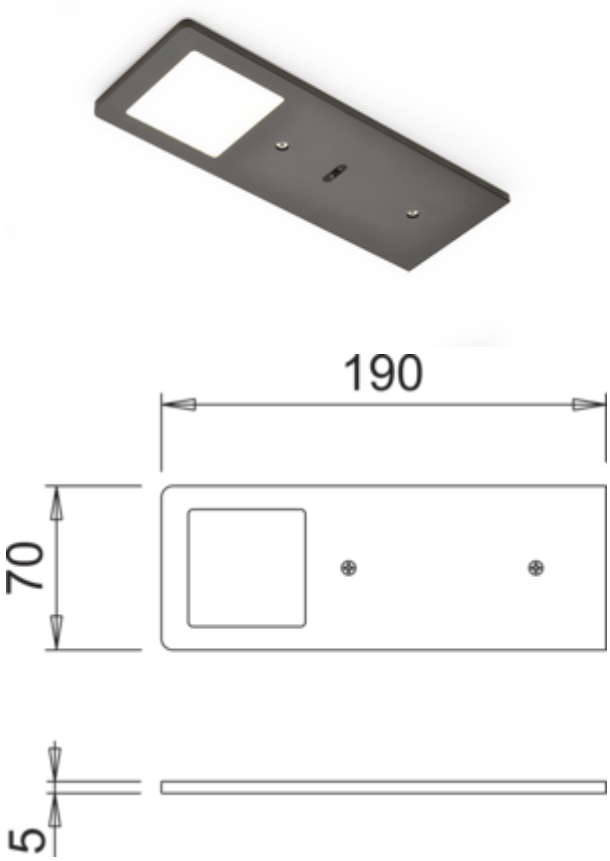

AstraLED SE

Product number: 7063334
Configuration: single lamp w. LED Touch s. d., 3000 K warm white

Configuration options

7063333 | single lamp without switch, 3000 K warm white
7063334 | single lamp w. LED Touch s. d., 3000 K warm white
7063335 | set-2, 3000 K warm white
7063336 | set-3, 3000 K warm white
7063337 | set-5, 3000 K warm white
7063348 | individual lamp without switch, 3900 K neutral white
7063349 | single lamp w. LED Touch s. d., 3900 K neutral white
7063350 | set-2, 3900 K neutral white
7063351 | set-3, 3900 K neutral white
7063352 | set-5, 3900 K neutral white

✓ Under-cabinet/niche light
✓ 3000 K warm white
✓ 5 watts

Lamp for mounting from below. Aluminium housing, 5 mm, illumination without visible LED points with integrated toch switch.

Individual lamp without or with LED Touch switch and dimmer (w. LED Touch s. d.)
— 5 watt, 24 V, two colour ranges: **3000 K** warm white, **3900 K** neutral white
— 65 lumen/watt
— memory function: the last setting is saved
— brightness continuously dimmable using LED touch switch and dimmer
— 200 mm supply line, 2000 mm connecting line with mini-plug-in system

Set 2, 3, 5 with LED Touch switch and dimmer consisting of:
— 1, 2 or 4 individual lamps with switch (7063333/7063348)
— 1 individual lamp with LED Touch switch and dimmer (7063334/7063349)
— 1 LED converter 30 watt
— may be extended to 6 lamps

This product contains a light source with the energy efficiency class F.

more infos...

Naber GmbH
Enschedestr. 24
DE-48529 Nordhorn

Tel. +49 5921 704-0
Fax +49 5921 704-140
naber@naber.com

Technical data

Article type	Luminaire
Height	5 mm
Width	190 mm
Energy efficiency class	F
Transformer / converter required	Yes, must be ordered separately
Protection class	III
Mounting/Fixing	Base unit installation (wall unit/ shelf)
Material housing	aluminium
Length of connection cable (secondary)	2.000 mm
Switch	Yes
Surface/coating	matt
Shape	angular
Memory function	Yes
Length of the supply line (primary)	150 mm

Illuminant included	Yes
Dimmer	Yes
Housing colour	black matt
Colour temperature	3000 K warm white
Type of dimming	brightness continuously dimmable
Plug-in system	with mini plug-in system
Illuminant type	LED
Replaceable illuminant	No
Light yield	65 lumen/watt
Homogeneous light field without visible LED points	Yes
Touch function	Yes
Design	Under-cabinet/niche light
Dimming function (composite)	Yes, brightness continuously dimmable
Illuminant power	5 watts