

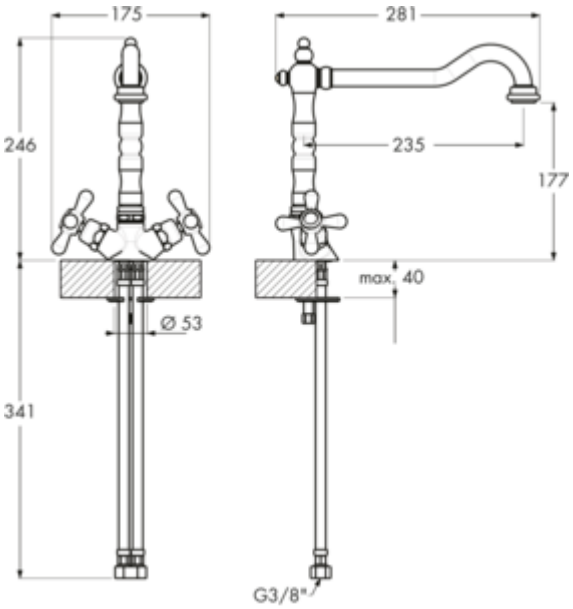

LINEA Passato 1

Product number: 5011234
Configuration: oxidized silver, high pressure

Configuration options
5011232 | chrome, high pressure
5011233 | antique brass, high pressure
5011234 | oxidized silver, high pressure

✓ Sink faucet
✓ high pressure
✓ with swivelling outlet

Dual-handle faucet. With swivelling outlet.
— swivel range 360°
— drill Ø 35 mm
— corresponds to the German and European drinking water regulation/directive

BELGAQUA

more infos...

Technical data

Article type	Sink faucet	Cartridge with ceramic sealing discs	Yes
Brand	LINEA	Swivel range outlet	360°
Number of handles	2	Type of fitting	Dual-handle faucet
Total installation height	246 mm	Operating pressure	high pressure
Height	246 mm	Material	brass
Outreach	235 mm	Worktop thickness	40 mm
Outlet	with swivelling outlet	Number of tap holes	1
Discharge height	177 mm	Connection type	G 3/8“ F
Operating mode	Rotary handle	Connection size	DN 15
Drilling diameter	35 mm	Connection hoses	450 mm

Dimensional sketch (PDF)

