

Nova Plus colour change LED

Product number: 7061334
Configuration: single lamp without switch, stainless steel col.

Configuration options
7061334 | single lamp without switch, stainless steel col.

✓ Surface-mounted lamp
✓ Built-in lamp
✓ 2700 K warm white to 6500 K cold white

Surface mounted lamp, built-in lamp, ceiling light. Plastic body, round, with Power LEDs.

By removing the spacer ring, it can also be used as a built-in lamp.

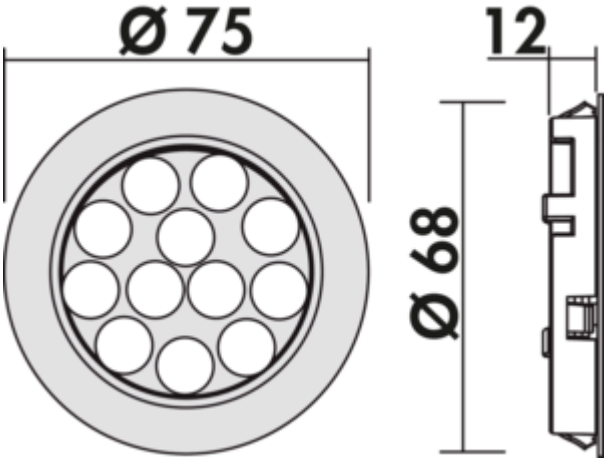

Individual lamp without switch
— 3 watts, 12 V
— continuous control of the light colour from **2700 K** warm white to **6500 K** cold white
— max. 87 lumen/watt at **6500 K** cold white
— memory function: the last setting is stored
— dimmer function: brightness continuously dimmable
— 2000 mm supply line with mini-plug-in system
— drill Ø 68 mm, installation depth 12 mm
— LIC 2.0/MEC LED system compatible

This product contains a light source of energy efficiency class G.

Weitere Informationen zum LIC LED-System

more infos...

Technical data

Article type	Luminaire
Drilling diameter	68 mm
Width	75 mm
Energy efficiency class	G
Transformer / converter required	Yes, must be ordered separately
Mounting/Fixing	Base unit installation (wall unit/shelf) installation surface mounting Ceiling mounting
Material housing	plastic
Certification	CE F-sign MM sign
Switch	No
Shape	round
Memory function	Yes
Length of the supply line (primary)	2.000 mm
Outer diameter	75 mm
Installation depth	12 mm

Illuminant included	Yes
Dimmer	Yes
Housing colour	stainless-steel coloured
Colour temperature	2700 K warm white to 6500 K cold white
Colour temperature adjustable	stepless
Type of dimming	brightness continuously dimmable
LIC system compatible	Yes
Plug-in system	with mini plug-in system
Illuminant type	LED
Replaceable illuminant	No
Light yield	max. 87 lumen/watt at 6500 K cold white
Design	Surface-mounted lamp Built-in lamp
Dimming function (composite)	Yes, brightness continuously dimmable
Illuminant power	3 watts