

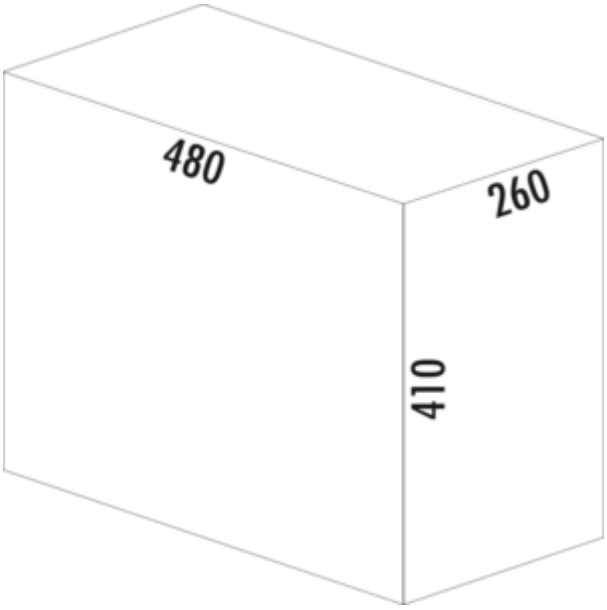

WESCO® Traditionline Double-Boy® 410 S/ 300-2

Product number: 8011112
Configuration: aluminium grey

Configuration options
8011112 | aluminium grey

✓ Pull-out technology for rotating doors
✓ full pull-out
✓ 30 l
— waste capacity 30 (1 x 20/1 x 10) l
— technology: full pull-out
— complete lid aluminium grey
— fitting: cabinet bottom
— **the ideal space saver with an installation height of only 410 mm**

more infos...

Technical data

Article type	Waste collection system	Colour total cover	aluminium grey
Brand	WESCO®	Cover	Yes
Height	410 mm	Lid type(s)	Complete lid
Width	260 mm	Number of containers	2
Mounting/Fixing	cabinet bottom	Opening technology	full pull-out
Installation_height_list	410 mm	Total volume	30 l
Cabinet width	300 mm	Volume/content container 1	20 l
Shape	angular	Volume/content container 2	10 l
Installation depth	480 mm	Design	Pull-out technology for rotating doors
Material lid	plastic	Volume/Content container	20/10
Material container	plastic		

Spare Parts

8010085	Complete Lid, Accessory, anthracite
8010117	Wire hanger bucket, Single bucket, aluminium grey, 20 l
8010118	Wire hanger bucket, Single bucket, aluminium grey, 10 l
8010126	Replacement lid, Accessory, aluminium grey

Naber GmbH
Enschedestr. 24
DE-48529 Nordhorn

Tel. +49 5921 704-0
Fax +49 5921 704-140
naber@naber.com

Dimensional sketch (PDF)

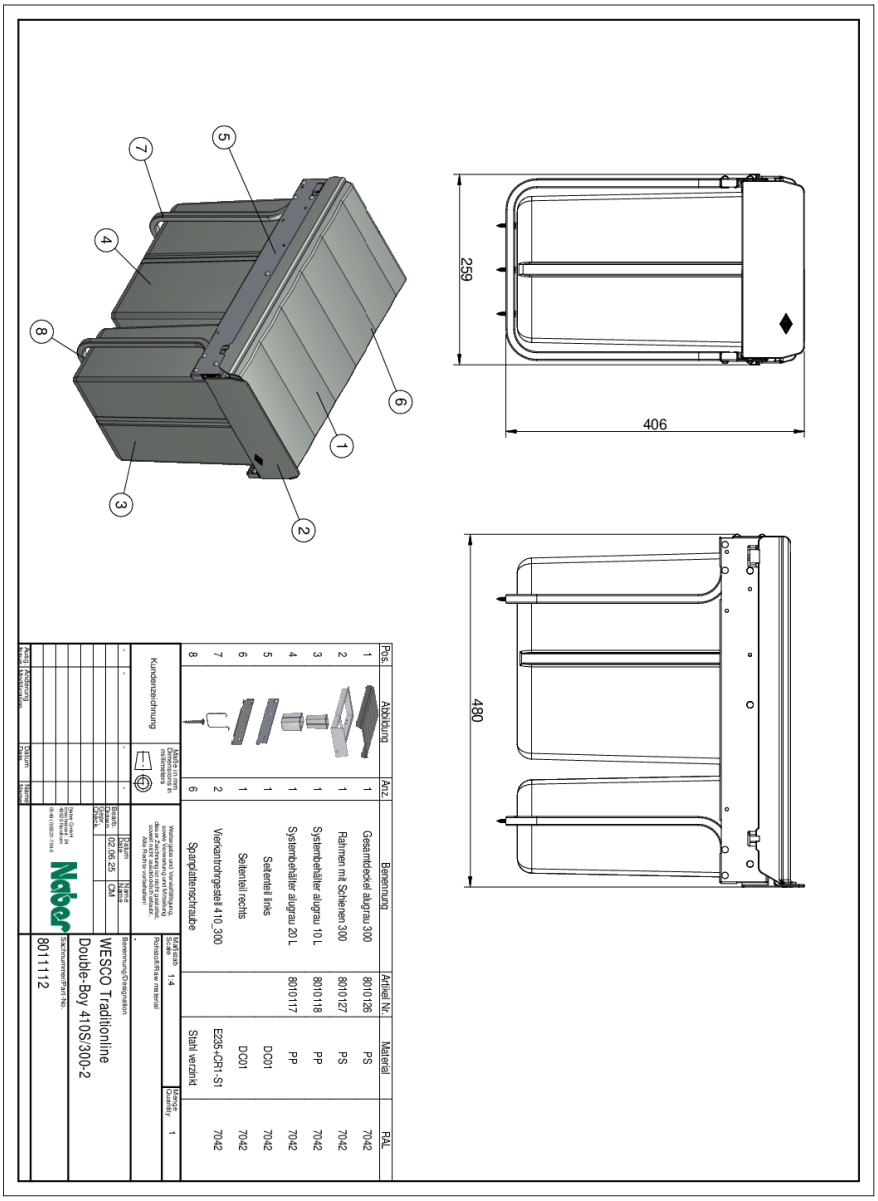

Pos.	Abbildung	Anz.	Benennung	Artikel Nr.	Material	RAL
1		1	Gesamtdeckel alugrau 300	8010126	PS	7042
2		1	Rahmen mit Schienen 300	8010127	PS	7042
3		1	Systembehälter alugrau 10 L	8010118	PP	7042
4		1	Systembehälter alugrau 20 L	8010117	PP	7042
5		1	Seitenteil links		DC01	7042
6		1	Seitenteil rechts		DC01	7042
7		2	Verkantrohrgestell 410_300		E235-CR1-S1	7042
8		6	Spanplattenschraube		Stahl verzinkt	

Kundenzeichnung

Maße in mm / Dimensions in millimeters

Maßstab / Scale 1:4

Benennung/Zeichnungsnr. / Part name/Drawing no.

Rohteil/Raw material

Menge / Quantity 1

Name: CM
Datum: 02.06.25
Gepr.:

WESCO Traditionline
Double-Boy 410S/300-2

Sachnummer/Part No.: 8011112

Änderung / Modification | Datum / Date | Name / Name