

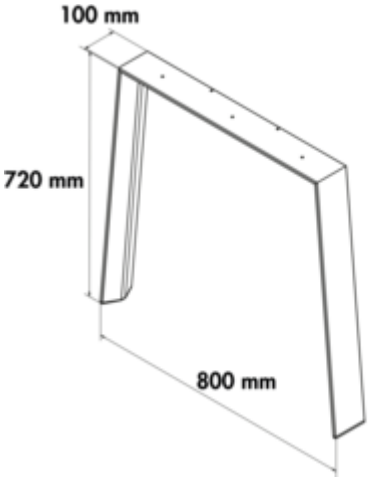


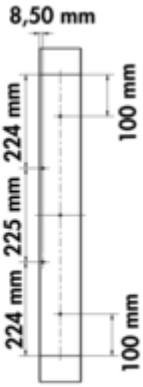


# WESCO® Table frame ATG420

Product number: 3032257
Configuration: stainless steel-coloured brushed

**Configuration options**
3032257 | stainless steel-coloured brushed
3032258 | black matt

✓ Table frame
✓ Table frame
✓ Carrying capacity: 120 kg
Frame in contemporary design.
— profile foot 100 x 30 mm
— frame dimensions 720 x100 x 800 mm (H x W x D)
— 1 PU = 1 skid

All items are manufactured to order in Germany based on customer requirements.

**Max. load bearing capacity:** 120 kg (per pair)
**Max. dimensions of the table top:** 2400 x 1200 mm

**Use of glass, ceramic and granite plates not possible.**

**Dimensions for custom-made frames (3504999):**
min. 250 x 400 mm (H x D)
max. 1100 x 1200 mm (H x D)

more infos...

## Technical data

| | |
|---|---|
| Article type | Table frame |
| Brand | WESCO® |
| Height | 720 mm |
| Width | 100 mm |
| Material | aluminium |
| Note | All items are manufactured to order in Germany based on customer requirements.<br>Use of glass, ceramic and granite plates not possible.<br>table top not included in scope of delivery |
| Suitable for | freestanding tables |
| Surface/coating | brushed |
| Shape | slanted |
| Frame type | Table frame |

| | |
|---|---|
| With mounting plate | Yes |
| Preparation for | APL plate |
| Dimensions profile | 100 x 30 mm |
| Dimensions profile foot/floor plate | 100 x 30 mm |
| Dimensions upper mounting plate | 100 x 673 mm |
| Top width | 673 mm |
| Width below | 800 mm |
| Max. Dimensions for table top | 2400 x 1200 mm |
| Height without APL | 720 mm |
| Carrying capacity | 120 kg |