

125 wall connector 1

Product number: 4020040
Configuration: white

Configuration options
4020040 | white

✓ Connecting element
✓ Plug-in system for subsequent gluing
✓ with backpressure shutter

For use in chimney shafts. For connection to round pipe 125.
— with backpressure shutter.
— hose/tube connector Ø 125 mm
— connector depth 24 mm
— round tube with a length of 350 mm
— wall penetration Ø ca. 132 mm

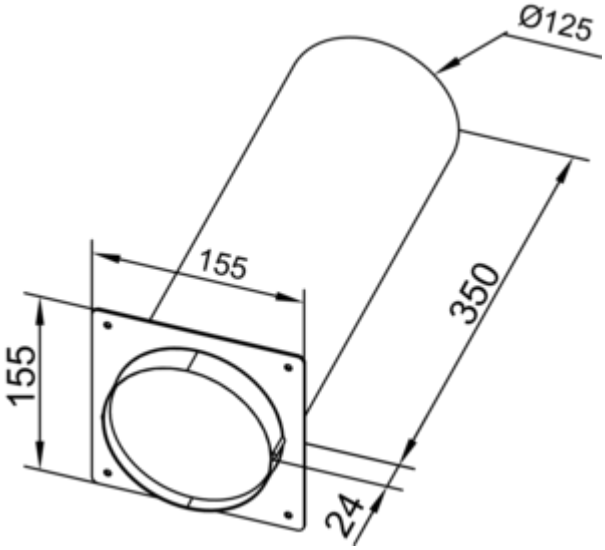

more infos...

Technical data

Article type	Connecting element	Support depth	24 mm
Height	155 mm	Connection diameter	125 mm
Width	155 mm	Pipe socket dimension	hose/pipe connector Ø 125 mm
Mounting/Fixing	Plug-in system for subsequent gluing	System dimension	125
Shape	round	Output drive	round

Naber GmbH
Enschedestr. 24
DE-48529 Nordhorn

Tel. +49 5921 704-0
Fax +49 5921 704-140
naber@naber.com

Dimensional sketch (PDF)

