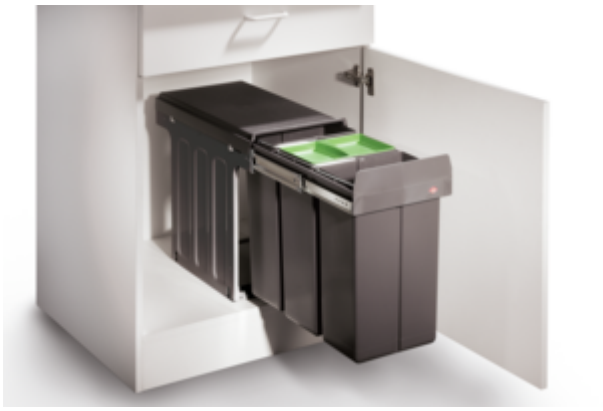

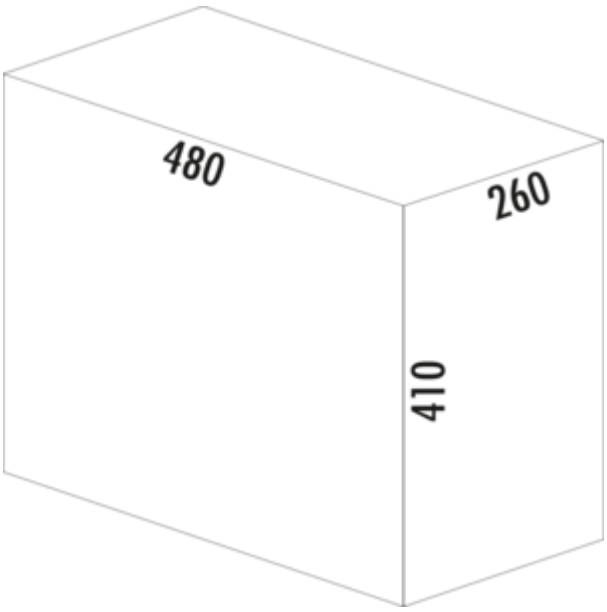

WESCO® Profiline Trio-Boy® 410 S/300-3

Product number: 8012089
Configuration: with bio lid, anthracite

Configuration options
8012089 | with bio lid, anthracite

✓ Pull-out technology for rotating doors
✓ full pull-out
✓ 30 l
— waste capacity 30 (3 x 10) l
— technology: full pull-out
— frame/guide silver
— complete lid anthracite
— fitting: cabinet bottom
— **the ideal space saver with an installation height of only 410 mm**

more infos...

Technical data

Article type	Waste collection system	Cover	Yes
Brand	WESCO®	Lid type(s)	Complete lid
Height	410 mm	Number of containers	3
Width	260 mm	Opening technology	full pull-out
Mounting/Fixing	cabinet bottom	Total volume	30 l
Installation_height_list	410 mm	Volume/content container 1	10 l
Cabinet width	300 mm	Volume/content container 2	10 l
Shape	angular	Volume/content container 3	10 l
Frame colour	silver	Colour guide	silver
Installation depth	480 mm	Colour container lid	green
Material lid	plastic	Design	Pull-out technology for rotating doors
Material container	plastic	Volume/Content container	10/10/10
Colour total cover	anthracite	Organic lid	Yes

Spare Parts

8010095	Wire hanger bucket, Single bucket, anthracite, 10 l
8010085	Complete Lid, Accessory, anthracite
8010003	Bio-lid, Lid, green, for 7/ 8/ 10 l

Dimensional sketch (PDF)

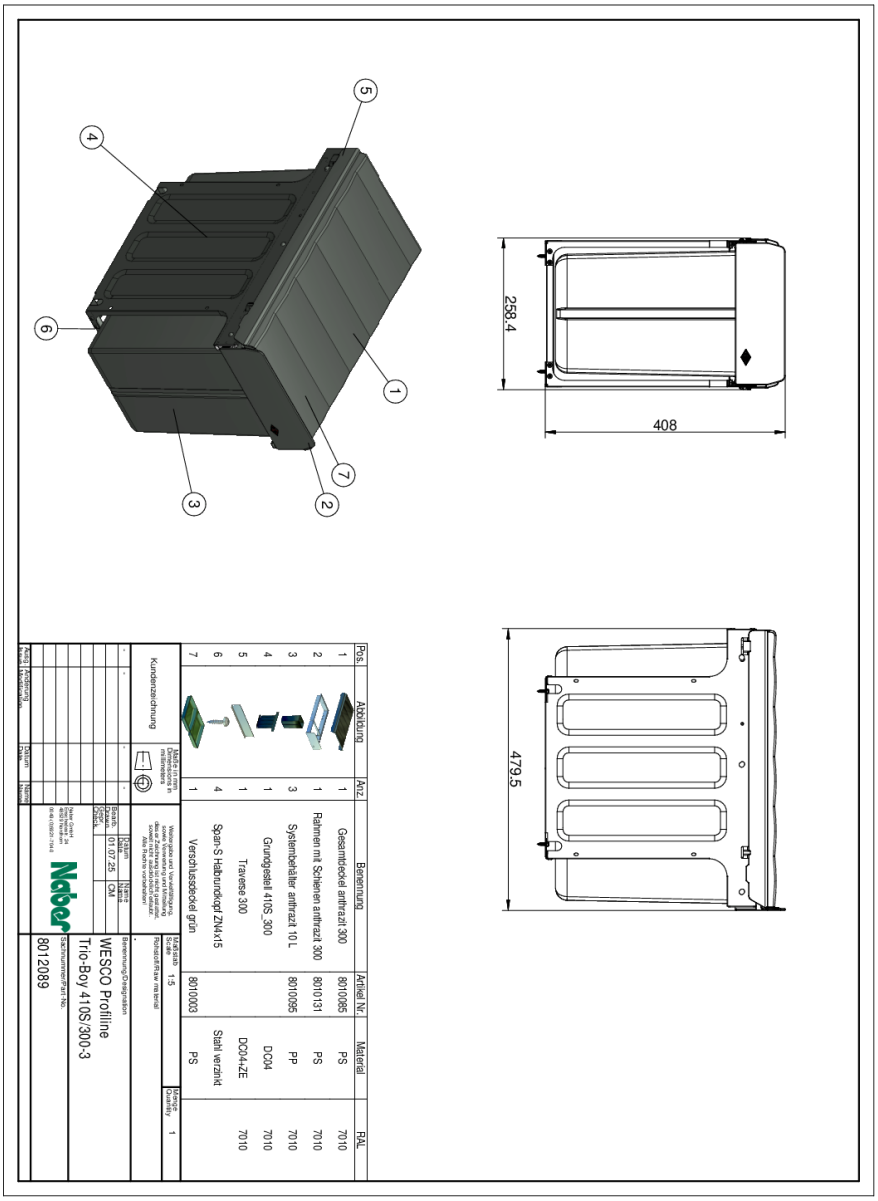

Pos.	Abbildung	Anz.	Benennung	Artikel Nr.	Material	RAL
1		1	Gesamtdeckel anthrazit 300	8010085	PS	7010
2		1	Rahmen mit Schienen anthrazit 300	8010131	PS	7010
3		3	Systembehälter anthrazit 10 L	8010095	PP	7010
4		1	Grundgestell 410S_300		DC04	7010
5		1	Traverse 300		DC04+ZE	7010
6		4	Span-S Halbrundkopf ZN4x15		Stahl verzinkt	7010
7		1	Verschlussdeckel grün	8010003	PS	

Kundenzeichnung

Maßstab 1:5 / Scale 1:5

Wesco Group GmbH
Max-Planck-Straße 1
48653 Coesfeld

Naber

Name: Datum: Norm:
Bearb. 01.07.25 CM
Gepr.
Norm

WESCO Profiline
Trio-Boy 410S/300-3

Sachnummer/Part No.
8012089

Benennung/Designation

Rohteil/Raw material

Menge/ Quantity 1

Änderung / Modification | Datum / Date | Name