

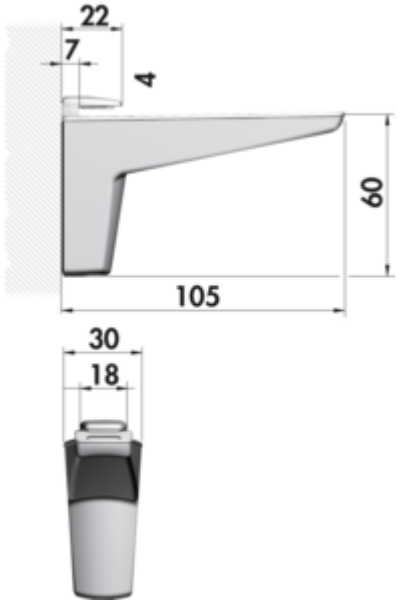

Moon

Product number: 3021090
Configuration: stainless steel coloured

Configuration options
3021090 | stainless steel coloured
3021091 | black matt

✓ Shelf support
Shelf support.
— for plate thickness of 4–25 mm
— load-bearing capacity ca. 50 kg/pair of supports for a depth of 320 mm
— bracket length 105 mm
— **only available in units of 2 pieces**

Order glass shelves separately.

more infos...

Technical data

Article type	Shelf support
Height	60 mm
Width	105 mm
Mounting/Fixing	Wall mounting

Note	only available in units of 2 pieces Order glass shelves separately.
Carrying capacity	load-bearing capacity ca. 50 kg/pair of supports for a depth of 320 mm
Lighting	No
Suitable panel thickness	4–25 mm