

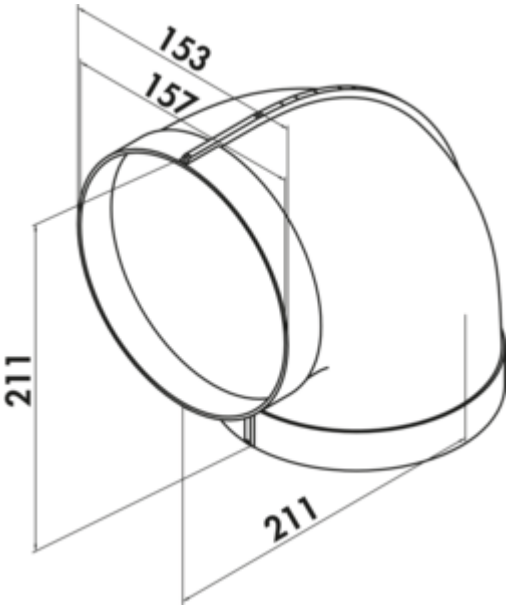

R-RBV flow 150 pipe bend 90°

Product number: 4052015
Configuration: white

Configuration options
4052015 | white

✓ Connecting element
✓ Plug-in system for subsequent gluing
✓ can be laid close to corners due to its very small inner radius

Low-loss deflection due to integrated guide vane. With conducts integrated on both sides.

— **Also suitable for direct hood connection.**
— Up to 70 % less pressure loss through guide vane technology. This results in considerably increased performance at reduced noise generation.
— Can be laid close to corners due to its very small inner radius.
— Optimal transition to all wall sleeves with round connector.
— Ø 153 mm

more infos...

Technical data

Article type	Connecting element
Height	211,5 mm
Width	211,5 mm
Material	Polystyrene
Mounting/Fixing	Plug-in system for subsequent gluing can be laid close to corners due to its very small inner radius
Note	also suitable for direct connection

Further	optimal transition to all wall sleeves with round connector up to 70 % less pressure loss through guide vane technology. This results in considerably increased performance at reduced noise generation
Shape	round
Connection diameter	153 mm
System dimension	150
Output drive	round
Ventilation system	COMPAIR flow 150

Dimensional sketch (PDF)

