

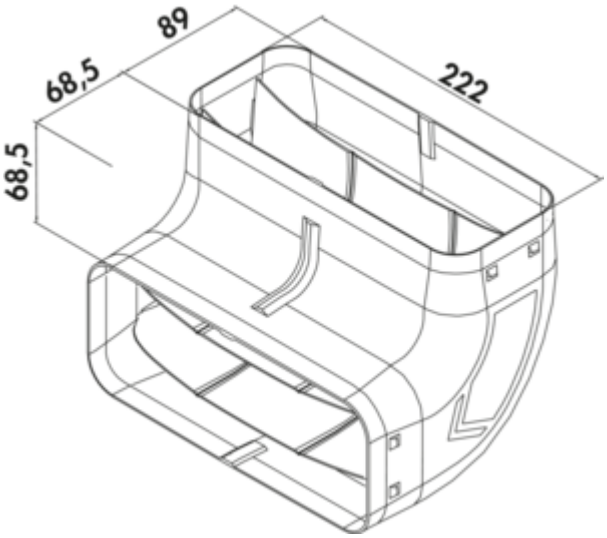

PRIME flow P-RBV 150 pipe bend vertical 90°

Product number: 4051008
Configuration: light grey

Configuration options
4051008 | light grey

✓ Connecting element
✓ N-click system with integrated latching elements
— N-Klick system for secure connection with the universal connector
— with optimised guide vanes
— improved flow technology

more infos...

Technical data

Article type	Connecting element	Mounting/Fixing	N-click system with integrated latching elements
Brand	PRIME flow	System dimension	150
Height	164 mm	Output drive	angular
Width	222 mm	Ventilation system	COMPAIR PRIME flow®

Naber GmbH
Enschedestr. 24
DE-48529 Nordhorn

Tel. +49 5921 704-0
Fax +49 5921 704-140
naber@naber.com

Dimensional sketch (PDF)

