

# Corno Basso PR3

Product number: 1013145
Configuration: stainless steel

**Configuration options**
1013145 | stainless steel
1041147 | set (sink and Arco 1 faucet)

✓ Built-in sink
✓ Flush mounted sink
✓ Drain and spill-over fitting

Built-in sink. Single bowl. 3½" drain and spill-over fitting.
**Flat edge: also suitable for flush installation**
— suitable for worktop thicknesses from 10 mm to 40 mm
— cut-out dimensions ca. 435 x 495 mm (built-in sink)

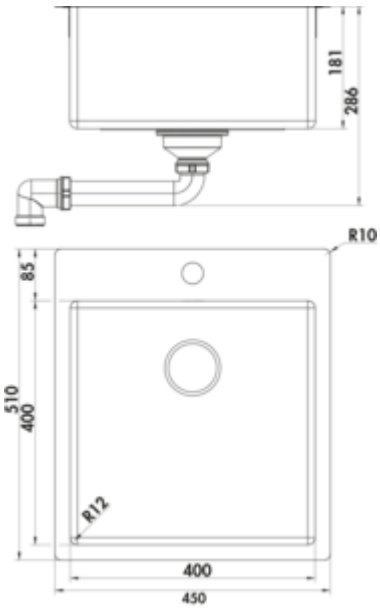


more infos...

## Technical data

| | | | |
|---|---|---|---|
| Article type | Sink | Height main sink | 286 mm |
| Height | 286 mm | Depth main sink | 510 mm |
| Width | 450 mm | Flushing radius (R) | 10 |
| Material | stainless steel | Maximum worktop material thickness | 40 mm |
| Cabinet width | 500 mm | Material thickness worktop minimum | 10 mm |
| Cut-out dimension | approx. 435 x 495 mm (built-in sink) | Number of tap holes | 1 |
| Excenter fitting | Drain and spill-over fitting | Armature bench | Yes |
| Valve type | 3½" basket strainer valve flush | Number of holes | 1 |
| Overflow | with overflow | Note fitting bore | pre-drilled |
| Installation variant | Built-in sink<br>Flush mounted sink | Number of sinks | 1 main sink |
| Main sink width | 450 mm | Number of overflow points | 1 |

Naber GmbH
Enschedestr. 24
DE-48529 Nordhorn

Tel. +49 5921 704-0
Fax +49 5921 704-140
naber@naber.com

## Recommendations

| | |
|---|---|
| 5011250 | Arco 1, Sink faucet, chrome, high pressure |

Naber GmbH
Enschedestr. 24
DE-48529 Nordhorn

Tel. +49 5921 704-0
Fax +49 5921 704-140
naber@naber.com

## Dimensional sketch (PDF)

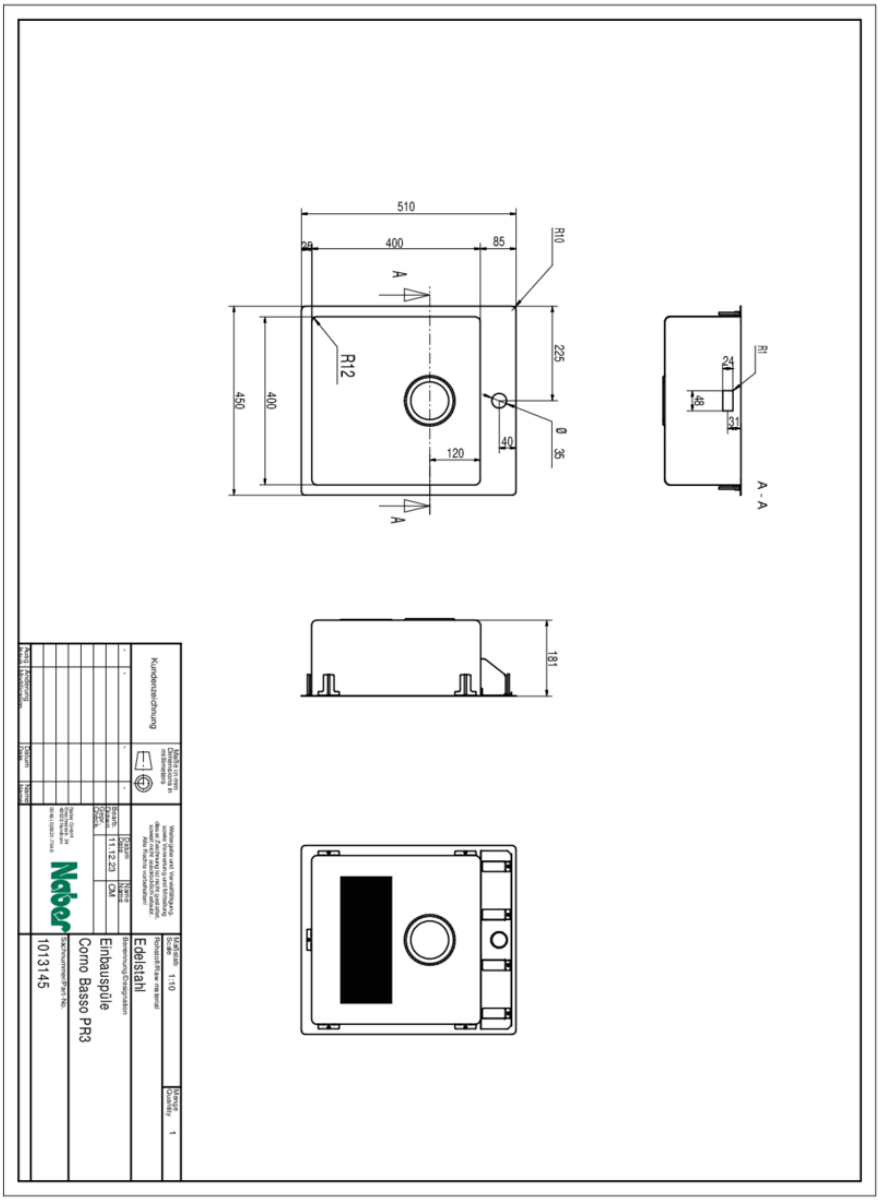

## Installation dimensions (PDF)

