

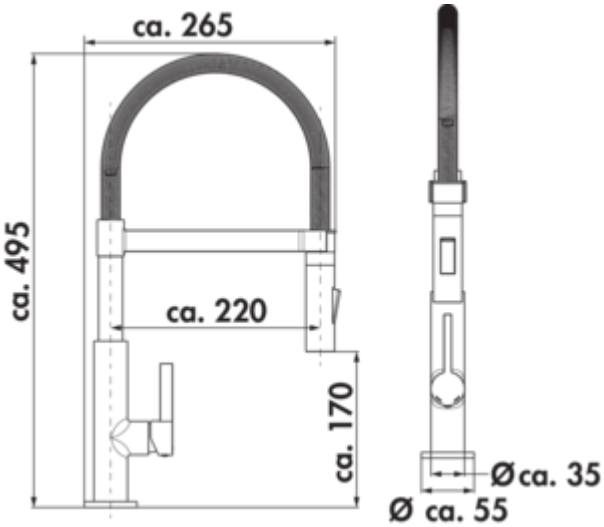

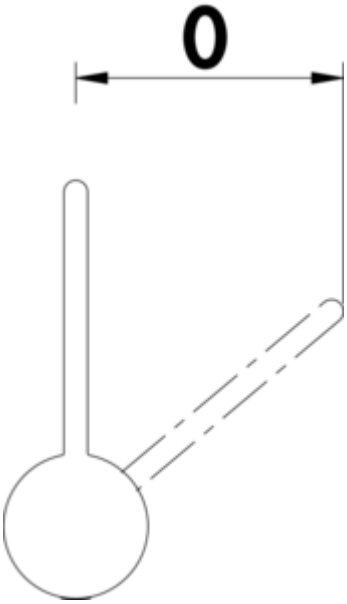

LINEA Drive 6

Product number: 5011094
Configuration: black matt, high pressure

Configuration options
5011094 | black matt, high pressure

✓ Sink faucet
✓ high pressure
✓ arched outlet with soft touch hose and spout with magnetic holder

Single lever mixer. With side lever, 2-stream hand shower and ceramic cartridge.
Arched outlet with soft touch hose and spout with magnetic holder.
— swivel range 360°
— drill Ø 35 mm
— corresponds to the German and European drinking water regulation/directive

EDELSTAHL® Rost frei

KERAMISCHE DICHTUNG

more infos...

Naber GmbH
Enschedestr. 24
DE-48529 Nordhorn

Tel. +49 5921 704-0
Fax +49 5921 704-140
naber@naber.com

Technical data

Article type	Sink faucet
Brand	LINEA
Number of handles	1
Total installation height	495 mm
Height	495 mm
Outreach	220 mm
Outlet	arched outlet with soft touch hose and spout with magnetic holder
Discharge height	170 mm
Operating mode	Lever
Drilling diameter	35 mm
Handle position	side lever

Cartridge with ceramic sealing discs	Yes
Swivel range outlet	360°
Type of fitting	Single lever faucet
Operating pressure	high pressure
Width	55 mm
Material	brass
Surface/coating	powder coated
Number of tap holes	1
Minimum distance wall to centre tap hole	0 mm
Type of hose shower	Integrated hose spray
Max. Flow rate at 3 bar	5,9 l/min