

KWC Luna E1

Product number: 5022220
Configuration: stainless steel, high pressure

Configuration options
5022220 | stainless steel, high pressure
5022237 | chrome, high pressure
5022240 | chrome, low pressure
5022244 | black matt, high pressure

✓ Sink faucet
✓ high pressure
✓ with swivelling outlet

Single lever faucet. With swivelling outlet and ceramic cartridge.
— swivel range 160°
— drill Ø 35 mm

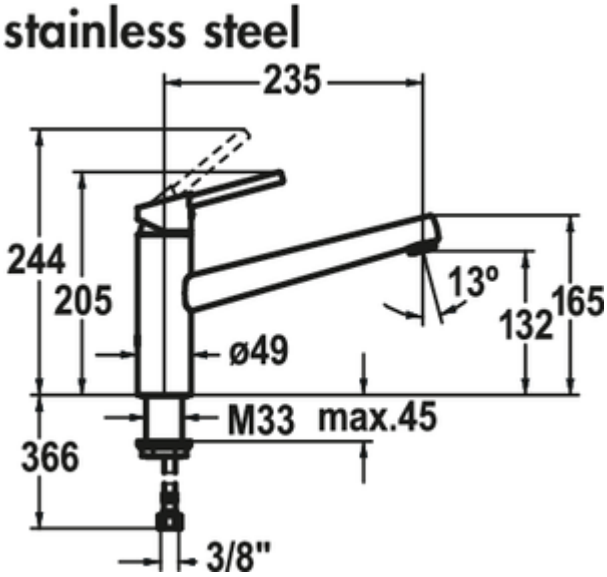

EDELSTAHL Rostfrei

SWISS MADE

KERAMISCHE DICHTUNG

more infos...

Technical data

Article type	Sink faucet	Cartridge with ceramic sealing discs	Yes
Brand	KWC	Swivel range outlet	160°
Number of handles	1	Type of fitting	Single lever faucet
Total installation height	205 mm	Operating pressure	high pressure
Height	205 mm	Width	49 mm
Outreach	235 mm	Material	stainless steel
Outlet	with swivelling outlet	Worktop thickness	45 mm
Discharge height	132 mm	Number of tap holes	1
Operating mode	Lever	Angle of inclination of aerator	13 °
Drilling diameter	35 mm	Temperature adjustable	Yes
Handle position	top		

Dimensional sketch (PDF)

