

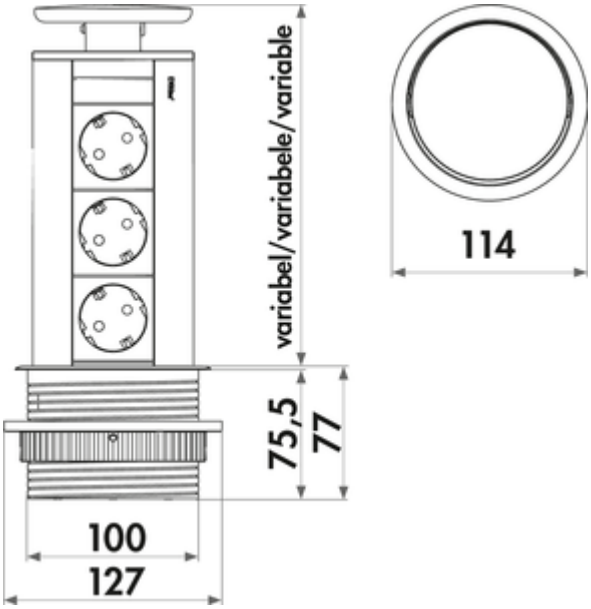

Evoline® Port 2

Product number: 8031131
Configuration: with earthed plug sockets, lid stainless steel

Configuration options
8031131 | with earthed plug sockets, lid stainless steel

✓ Retractable socket element
✓ 3 x earthed plug socket
✓ round

Energy box. Concealed. With 3 sockets for wall-mounted cabinets or worktops. Easy, guided extraction thanks to an easy-to-press button which also guides the cable neatly when reclosing.
— H 280 mm, extended H 210 mm
— 2500 mm mains connection line, earthing contact plug enclosed loosely
— drill Ø ca. 102 mm
— cable outlet below

more infos...

Technical data

Article type	Socket element
Height	250 mm
Drilling diameter	102 mm
Cable outlet	cable outlet below
Mounting/Fixing	installation for hanging cabinets in the worktop
Certification	CE TÜV
Shape	round
Length of the supply line (primary)	2.500 mm

Version sockets	3 x earthed plug socket
Mains plug loosely enclosed	Yes
Colour socket	black
Height extended	210 mm
Type of socket element	Retractable socket element
Number of sockets (total)	3
Opening mechanism	Push & Pull
Touch protection ("child safety lock")	with increased contact protection