

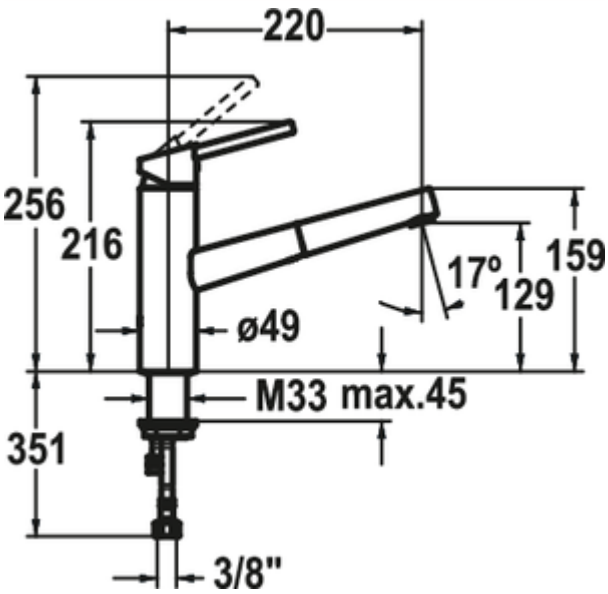

KWC Luna E8

Product number: 5022236
Configuration: stainless steel, high pressure

Configuration options
5022236 | stainless steel, high pressure

✓ Sink faucet
✓ high pressure
✓ with swivelling/pull-out metal outlet

Single lever faucet. With **swivelling/pull-out** outlet (**from metal**) and ceramic cartridge.
— swivel range 130°
— drill Ø 35 mm

more infos...

Technical data

Article type	Sink faucet	Cartridge with ceramic sealing discs	Yes
Brand	KWC	Swivel range outlet	130°
Number of handles	1	Type of fitting	Single lever faucet
Total installation height	216 mm	Operating pressure	high pressure
Height	216 mm	Width	49 mm
Outreach	220 mm	Material	stainless steel
Outlet	with swivelling/pull-out metal outlet	Hose thread	3/8"
Discharge height	129 mm	Worktop thickness	45 mm
Operating mode	Lever	TouchProtect	Yes
Drilling diameter	35 mm	Number of tap holes	1
Handle position	top	Angle of inclination of aerator	17 °

Dimensional sketch (PDF)

