

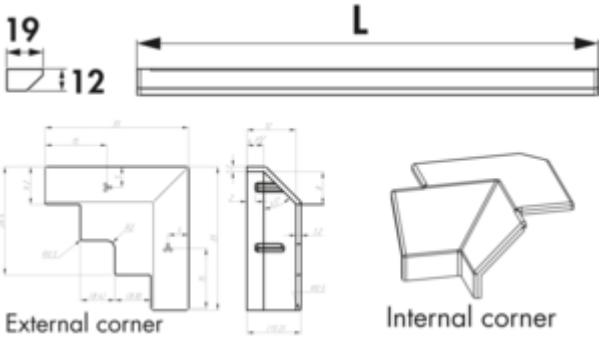

Manubrio colour change LED

Product number: 7061298
Configuration: single lamp, L 1500 mm, stainless steel coloured

Configuration options
7060107 | single lamp, L 2600 mm, black matt
7060108 | single lamp, L 1500 mm, black matt
7061197 | single lamp, L 2600 mm, stainless steel coloured
7061298 | single lamp, L 1500 mm, stainless steel coloured

✓ LED Stripe
✓ Base light/niche light
✓ Handle strip lighting

Handle strip lighting. Plastic body, self-adhesive LED strip, can be shortened every 50 mm, no visible LED incl. holding clamps for handle strips.

Individual lamp
— 7.8 watts per meter, 12 V
— continuous control of the light colour from **2700 K** warm white to **6500 K** cold white
— max. 80 lumen/watt at **6500 K** cold white
— 2000 mm two-sided supply line
— LED strip, two-sided feed-in
— incl. 4 end caps
— LIC 2.0/MEC LED system compatible
This product contains a light source of energy efficiency class F.

More information about the LIC/MEC LED system

more infos...

Technical data

Article type	LED stripe
Height	12 mm
Width	1.500 mm
Energy efficiency class	F
Transformer / converter required	Yes, must be ordered separately
Mounting/Fixing	self-adhesive
Material housing	plastic
Certification	CE F-sign MM sign
Shortenability	may be shortened every 50 mm
Shape	straight
Length of the supply line (primary)	2.000 mm
More parts	incl. holding clamps incl. 4 end caps

Illuminant included	Yes
Housing colour	stainless-steel coloured
Colour temperature	2700 K warm white to 6500 K cold white
Colour temperature adjustable	stepless
LIC system compatible	Yes
Illuminant type	LED
Replaceable illuminant	No
Light yield	max. 80 lumen/watt at 6000 K cold white
Connection	On both sides
Homogeneous light field without visible LED points	Yes
Design	LED Stripe Base light/niche light Handle strip lighting
Power per metre	7.8 watts