

PRIME flow Presa ventilation grid

Product number: 4041016
Configuration: H 100 mm, ventilation shaft approx. 163.2 cm²/m, stainless steel col., anodised

Configuration options

4041016 | H 100 mm, ventilation shaft approx. 163.2 cm²/m, stainless steel col., anodised
4041017 | H 130 mm, ventilation shaft approx. 217,6 cm²/m, stainless steel col., anodised
4041018 | H 150 mm, ventilation shaft approx. 272 cm²/m, stainless steel col., anodised
4041216 | H 100 mm, ventilation shaft approx. 163,2 cm²/m, black matt
4041217 | H 130 mm, ventilation shaft approx. 217,6 cm²/m, black matt
4041218 | H 150 mm, ventilation shaft approx. 272 cm²/m, black matt

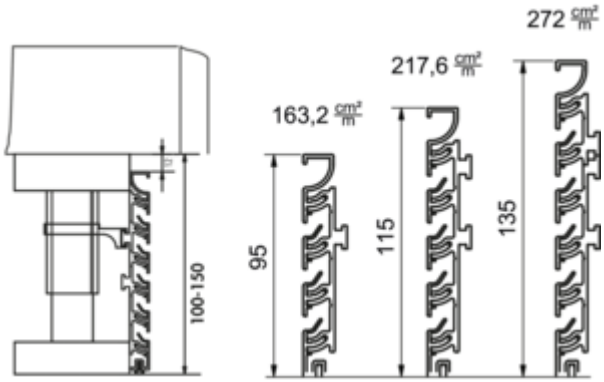

✓ Ventilation grid
✓ surface mounting
Aluminium slatted grille.
— length 2400 mm
— 10 mm LED Flexstripes can be used in the top profile slats
— can be shortened in length and height
— incl. 8 mounting brackets

more infos...

Technical data

Article type	Ventilation grid	Mounting/Fixing	surface mounting
Brand	PRIME flow	Surface/coating	anodised
Height	100 mm	Ventilation cross-section approx.	163,2 cm²
Width	2.400 mm	Shape	angular
Material	aluminium	System dimension	150
Properties	can be shortened	Ventilation system	COMPAIR PRIME flow®

Installation dimensions (PDF)

