

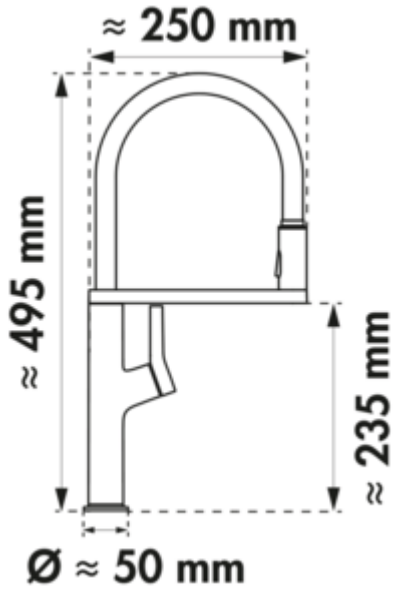


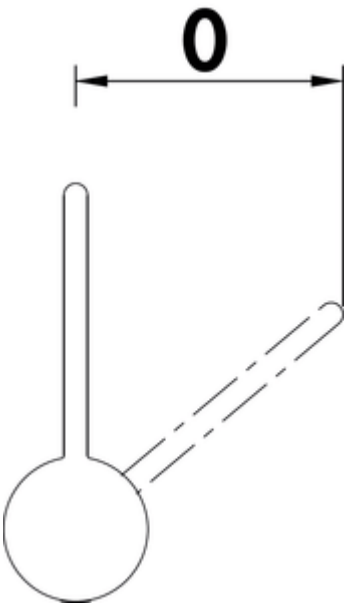


# Wasserwerk Aria

Product number: 5021315
Configuration: stainless steel coloured, high pressure

**Configuration options**
5021315 | stainless steel coloured, high pressure
5021316 | black matt, high pressure
5021317 | black-rosé-gold, high pressure
5021318 | black brushed-gold, high pressure
5021319 | graphite matt, high pressure

✓ Sink faucet
✓ high pressure
✓ with swivelling/pull-out outlet (can be switched to stream or shower)

Single lever faucet. With **swivelling/pull-out** outlet (can be switched to stream or shower), side lever, ceramic cartridge.
— cold-start function: In the center position, only cold water flows, avoiding unnecessary heating
— swivel range 360°
— drill Ø 35 mm

BELGAQUA

MADE IN GERMANY

KERAMISCHE DICHTUNG

more infos...

Naber GmbH
Enschedestr. 24
DE-48529 Nordhorn

Tel. +49 5921 704-0
Fax +49 5921 704-140
naber@naber.com

## Technical data

| | |
|---|---|
| Article type | Sink faucet |
| Brand | Wasserwerk |
| Height | 495 mm |
| Outreach | 250 mm |
| Outlet | with swivelling/pull-out outlet (can be switched to stream or shower) |
| Discharge height | 235 mm |
| Operating mode | Lever |
| Drilling diameter | 35 mm |
| Handle position | side lever |
| Cartridge with ceramic sealing discs | Yes |
| Swivel range outlet | 360° |
| Beam type | Shower jet<br>Comfort beam |
| Type of fitting | Single lever faucet |
| Operating pressure | high pressure |
| Width | 50 mm |
| Cartridge size | 25 mm |
| ECO function | energy-saving cold start function |
| Convertible jet/shower | Yes |
| Angle of inclination of aerator | 0 ° |
| Connection hoses | 500 mm |

Naber GmbH
Enschedestr. 24
DE-48529 Nordhorn

Tel. +49 5921 704-0
Fax +49 5921 704-140
naber@naber.com