

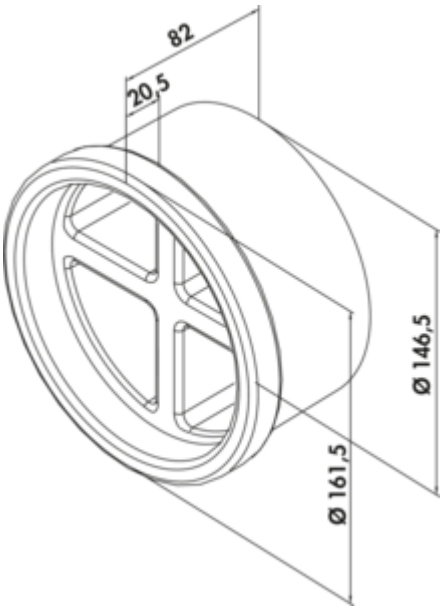

PRIME flow P-MRBS 150 wall conduct construction set

Product number: 4051029
Configuration: white/light grey

Configuration options
4051029 | white/light grey

✓ Accessory
✓ Wall mounting
— for on-site installation and in preparation for wall conduct installation
— connection of round pipe and round pipe bends

Set consisting of:
— 1 x P-RRO 150 round pipe, 500 mm
— 1 x wall connection sleeve
— 2 x hard foam plugs

more infos...

Technical data

Article type	Accessory	Shape	round
Brand	PRIME flow	System dimension	150
Width	220 mm	Output drive	round
Mounting/Fixing	Wall mounting	Ventilation system	COMPAIR PRIME flow®

Naber GmbH
Enschedestr. 24
DE-48529 Nordhorn

Tel. +49 5921 704-0
Fax +49 5921 704-140
naber@naber.com

Dimensional sketch (PDF)

