

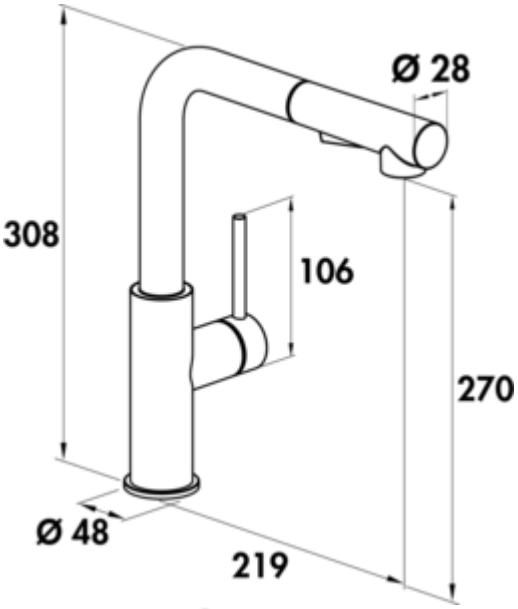

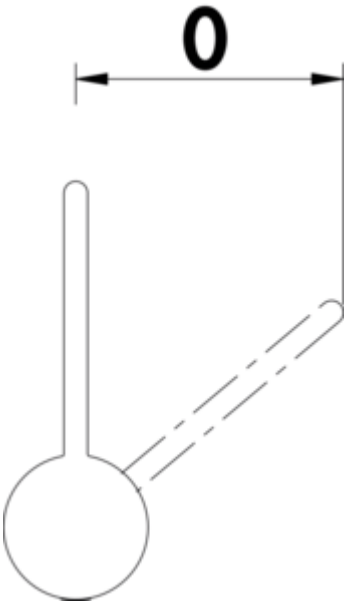

SERVIZIO Namor® 4 window fitting

Product number: 5025035
Configuration: stainless steel, high pressure

Configuration options
5025035 | stainless steel, high pressure
5025036 | black matt, high pressure

✓ Sink faucet
✓ high pressure
✓ energy-saving cold start function

Single lever faucet. With swivelling/pull-out hose with shower head (can be switched to stream or shower), side lever, laminar aerator and ceramic cartridge.
— **height when tilted only 50 mm**
— swivel range 120°
— drill Ø 35 mm
— corresponds to the German and European drinking water regulation/directive

EDELSTAHL® Rostfrei

KERAMISCHE DICHTUNG

more infos...

Naber GmbH
Enschedestr. 24
DE-48529 Nordhorn

Tel. +49 5921 704-0
Fax +49 5921 704-140
naber@naber.com

Technical data

Article type	Sink faucet
Brand	SERVIZIO
Number of handles	1
Height	308 mm
Outreach	219 mm
Discharge height	270 mm
Operating mode	Lever
Drilling diameter	35 mm
Handle position	side lever
Lever length	106 mm
Cartridge with ceramic sealing discs	Yes
Swivel range outlet	120°
Beam type	Laminar beam
Type of fitting	Single lever faucet

Operating pressure	high pressure
Width	48 mm
Material	stainless steel
Note	corresponds to the German and European drinking water regulation/ directive
Window fitting	Yes
Swivel range handle	0 °
Number of tap holes	1
ECO function	energy-saving cold start function
Convertible jet/shower	Yes
Length shower hose	820 mm
Height tilted	50 mm
Type of hose shower	with swivelling/pull-out hose with shower head (can be switched to stream or shower)
Connection hoses	820 mm

Naber GmbH
Enschedestr. 24
DE-48529 Nordhorn

Tel. +49 5921 704-0
Fax +49 5921 704-140
naber@naber.com

Dimensional sketch (PDF)

