

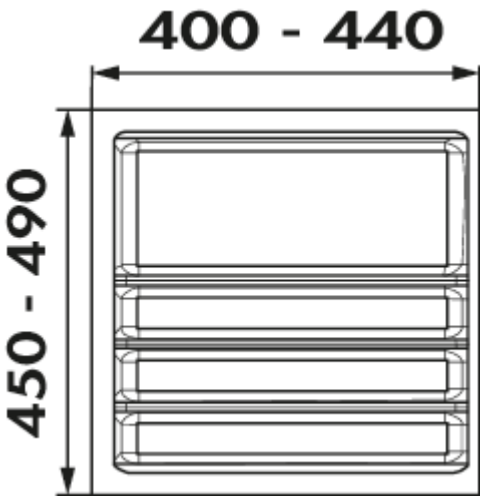

Ordine

Product number: 8034212
Configuration: for 500 mm cabinet, 2 dividing strip sets

Configuration options

8034210 | for 400 mm cabinet, 1 dividing strip set
8034211 | for 450 mm cabinet, 1 dividing strip set
8034212 | for 500 mm cabinet, 2 dividing strip sets
8034213 | for 600 mm cabinet, 2 dividing strip sets
8034214 | for 900 mm cabinet, 3 dividing strip sets

✓ Cutlery insert
✓ Cabinet width: 500 mm
✓ cuttable

Cutlery insert.
— stainless-steel coloured
— edge cuttable
— H 60 mm
— min./max. widths and depths see dimension drawings
— dividing strip sets anthracite are included in the scope of delivery

more infos...

Technical data

Article type	Cutlery insert	Properties	cuttable
Height	60 mm	Cabinet width	500 mm
Width	400 - 440 mm	More parts	2 dividing strip sets
Material	plastic		

Naber GmbH
Enschedestr. 24
DE-48529 Nordhorn

Tel. +49 5921 704-0
Fax +49 5921 704-140
naber@naber.com