

125 wall connector 2

Product number: 4033026
Configuration: white

Configuration options
4033026 | white

- ✓ Connecting element
- ✓ Plug-in system for subsequent gluing
- ✓ with backpressure shutter

For use in chimney shafts.
For rectangular connection to COMPAIR® flow 125.
— with backpressure shutter
— hose/pipe connector 174 x 82 mm
— connector depth 80 mm
— round pipe with 350 mm length
— wall penetration Ø ca. 132 mm

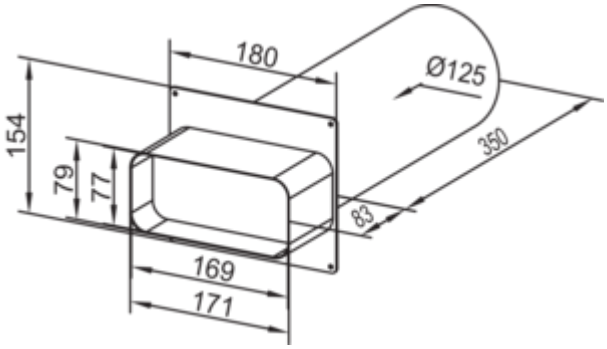

more infos...

Technical data

Article type	Connecting element	Pipe socket dimension	pipe connector 174 x 82 mm
Width	350 mm	Blind version	with backpressure shutter
Mounting/Fixing	Plug-in system for subsequent gluing	System dimension	125
Support depth	80 mm	Output drive	angular
Connection diameter	125 mm		

Naber GmbH
Enschedestr. 24
DE-48529 Nordhorn

Tel. +49 5921 704-0
Fax +49 5921 704-140
naber@naber.com

Dimensional sketch (PDF)

