

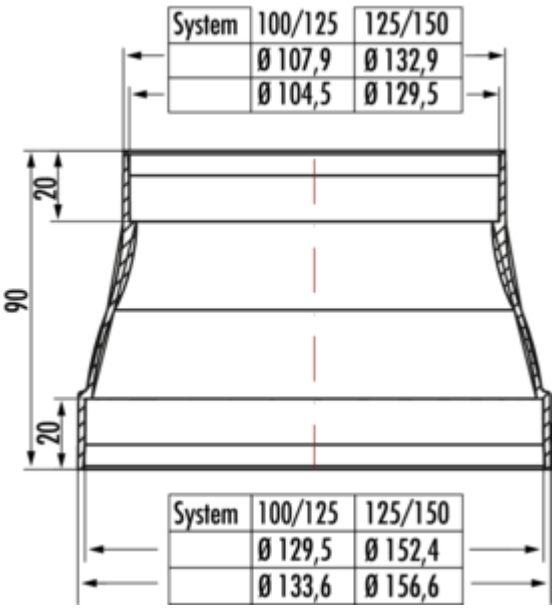

RDZ flow reducer

Product number: 4011048
Configuration: Ø 125/150 mm, white

Configuration options
4011048 | Ø 125/150 mm, white
4011049 | Ø 100/125 mm, white

✓ Connecting element
✓ Plug-in system for subsequent gluing
✓ reversible installation possible

For connecting Ø 125 mm round pipe to Ø 100 mm or Ø 150 mm round pipe to Ø 125 mm. Reversible installation possible. Flow-optimised design by avoiding sharp edges that stall the flow.

more infos...

Technical data

Article type	Connecting element
Height	90 mm
Width	90 mm
Material	Polystyrene
Mounting/Fixing	Plug-in system for subsequent gluing reversible installation possible

Shape	round
Connection diameter	125/150 mm
System dimension	125 150
Output drive	round
Ventilation system	Accessories

Dimensional sketch (PDF)

