

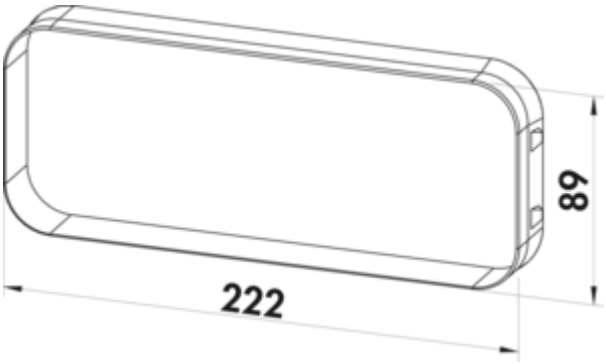

PRIME flow P-K-Klima flow 150 wall conduct

Product number: 4051069
Configuration: white

Configuration options
4051069 | white
4051071 | anthracite
4051075 | brick red
4051077 | light grey

✓ Wall sleeve
✓ plug-in system
Wall conduct, with backflow trap

— N-Klick system for secure connection with the universal connector
— direct connection of the flat adapter, round pipe or round pipe bends
— max. wall thickness 550 mm, can be shortened to 220 mm
— core hole drilling in nominal Ø 162 or 164 mm
— wall sleeve for tool-free installation and sealing against leakage

more infos...

Technical data

Article type	Wall sleeve	Shape	angular
Brand	PRIME flow	Connection diameter	150 mm
Material	plastic	Suitable wall thickness	max. wall thickness 550 mm
Mounting/Fixing	plug-in system	Blind version	with backpressure shutter
Diameter	150 mm	System dimension	150
Suitable for	direct connection of the flat adapter, round pipe or round pipe bends	Output drive	angular
Shortenability	can be shortened to 220 mm	Ventilation system	COMPAIR PRIME flow®
Field of use & application	Outside		

Naber GmbH
Enschedestr. 24
DE-48529 Nordhorn

Tel. +49 5921 704-0
Fax +49 5921 704-140
naber@naber.com

Dimensional sketch (PDF)

