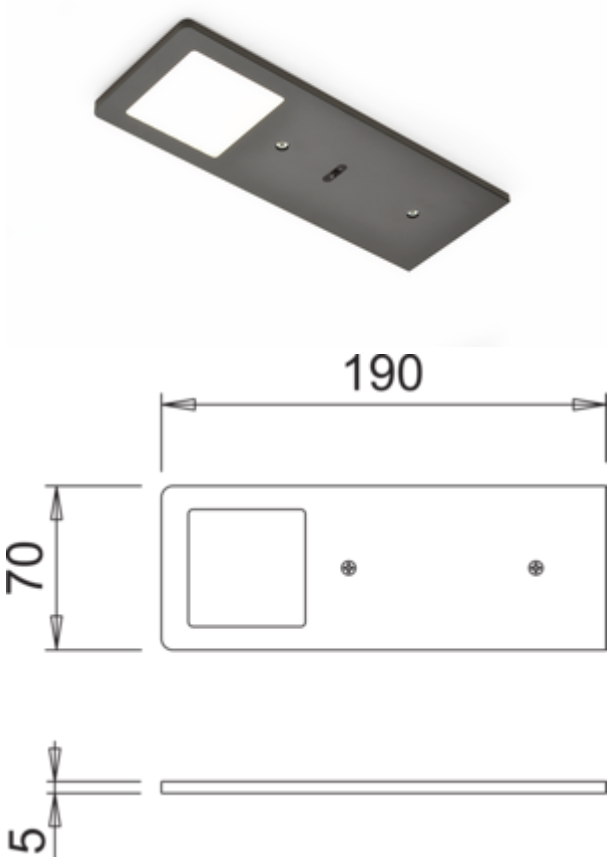


# AstraLED SE

Product number: 7063349
Configuration: single lamp w. LED Touch s. d., 3900 K neutral white

**Configuration options**

7063333 | single lamp without switch, 3000 K warm white
7063334 | single lamp w. LED Touch s. d., 3000 K warm white
7063335 | set-2, 3000 K warm white
7063336 | set-3, 3000 K warm white
7063337 | set-5, 3000 K warm white
7063348 | individual lamp without switch, 3900 K neutral white
7063349 | single lamp w. LED Touch s. d., 3900 K neutral white
7063350 | set-2, 3900 K neutral white
7063351 | set-3, 3900 K neutral white
7063352 | set-5, 3900 K neutral white

✓ Under-cabinet/niche light
✓ 3900 K neutral white
✓ 5 watts

Lamp for mounting from below. Aluminium housing, 5 mm, illumination without visible LED points with integrated toch switch.

**Individual lamp without or with LED Touch switch and dimmer (w. LED Touch s. d.)**
— 5 watt, 24 V, two colour ranges: **3000 K** warm white, **3900 K** neutral white
— 65 lumen/watt
— memory function: the last setting is saved
— brightness continuously dimmable using LED touch switch and dimmer
— 200 mm supply line, 2000 mm connecting line with mini-plug-in system

**Set 2, 3, 5 with LED Touch switch and dimmer consisting of:**
— 1, 2 or 4 individual lamps with switch (7063333/7063348)
— 1 individual lamp with LED Touch switch and dimmer (7063334/7063349)
— 1 LED converter 30 watt
— may be extended to 6 lamps

**This product contains a light source with the energy efficiency class F.**

more infos...

## Technical data

| | |
|---|---|
| Article type | Luminaire |
| Height | 5 mm |
| Width | 190 mm |
| Energy efficiency class | F |
| Transformer / converter required | Yes, must be ordered separately |
| Protection class | III |
| Mounting/Fixing | Base unit installation (wall unit/ shelf) |
| Material housing | aluminium |
| Length of connection cable (secondary) | 2.000 mm |
| Switch | Yes |
| Surface/coating | matt |
| Shape | angular |
| Memory function | Yes |
| Length of the supply line (primary) | 150 mm |

| | |
|---|---|
| Illuminant included | Yes |
| Dimmer | Yes |
| Housing colour | black matt |
| Colour temperature | 3900 K neutral white |
| Type of dimming | brightness continuously dimmable |
| Plug-in system | with mini plug-in system |
| Illuminant type | LED |
| Replaceable illuminant | No |
| Light yield | 65 lumen/watt |
| Homogeneous light field without visible LED points | Yes |
| Touch function | Yes |
| Design | Under-cabinet/niche light |
| Dimming function (composite) | Yes, brightness continuously dimmable |
| Illuminant power | 5 watts |