

# KWC Luna K2

Product number: 5022245
Configuration: black matt, high pressure

**Configuration options**
5022243 | chrome, high pressure
5022245 | black matt, high pressure
5022246 | chrome, low pressure

✓ Sink faucet
✓ high pressure

Single lever faucet. With **swivelling/pull-out** hose with shower head (can be switched to stream or shower) and ceramic cartridge.
— swivel range 130°
— drill Ø 35 mm

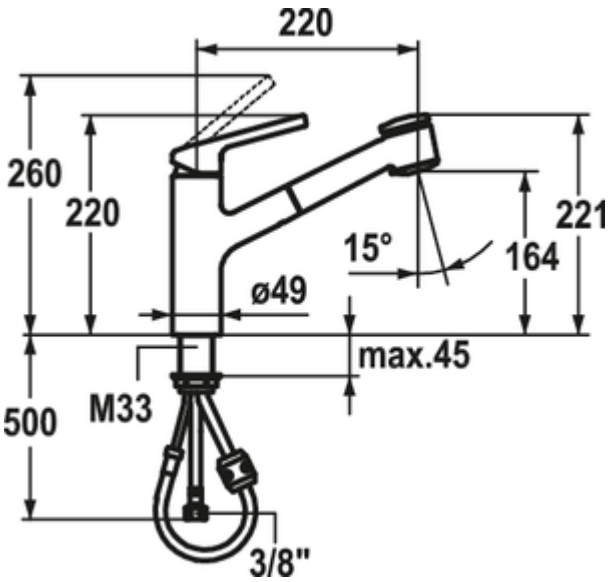


BELGAQUA

SWISS MADE

KERAMISCHE DICHTUNG

more infos...

## Technical data

| | | | |
|---|---|---|---|
| Article type | Sink faucet | Type of fitting | Single lever faucet |
| Brand | KWC | Operating pressure | high pressure |
| Number of handles | 1 | Width | 49 mm |
| Total installation height | 220 mm | Material | Zamak (zinc die-cast) |
| Height | 220 mm | Surface/coating | powder coated |
| Outreach | 220 mm | Worktop thickness | 45 mm |
| Discharge height | 164 mm | Number of tap holes | 1 |
| Operating mode | Lever | Convertible jet/shower | Yes |
| Drilling diameter | 35 mm | Angle of inclination of aerator | 15 ° |
| Handle position | top | Temperature adjustable | Yes |
| Cartridge with ceramic sealing discs | Yes | Type of hose shower | with swivelling/pull-out hose with shower head (can be switched to stream or shower) |
| Swivel range outlet | 130° | | |

## Dimensional sketch (PDF)

