

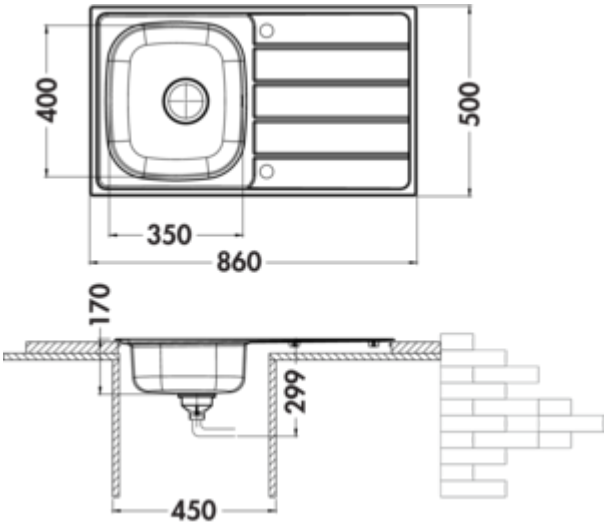

Built-in sink KD100

Product number: 1011149
Configuration: stainless steel

Configuration options
1011149 | stainless steel

✓ Built-in sink
✓ 3½" basket strainer valve flush

Built-in sink. With draining surface, reversible. 3½" drain and spillover valve
— suitable for worktop thicknesses from 38 mm to 48 mm
— cut-out dimensions ca. 842 x 482 mm

more infos...

Technical data

Article type	Sink	Height main sink	400 mm
Height	170 mm	Depth main sink	170 mm
Width	860 mm	Maximum worktop material thickness	48 mm
Material	stainless steel	Material thickness worktop minimum	38 mm
Cut-out dimension	according to template	Armature bench	Yes
Valve type	3½" basket strainer valve flush	Arrangement sinks	Reversible
Overflow	Overflow in the main basin	Number of overflow points	1
Installation variant	Built-in sink	Draining board	With ribbed draining surface
Main sink width	350 mm		

Dimensional sketch (PDF)

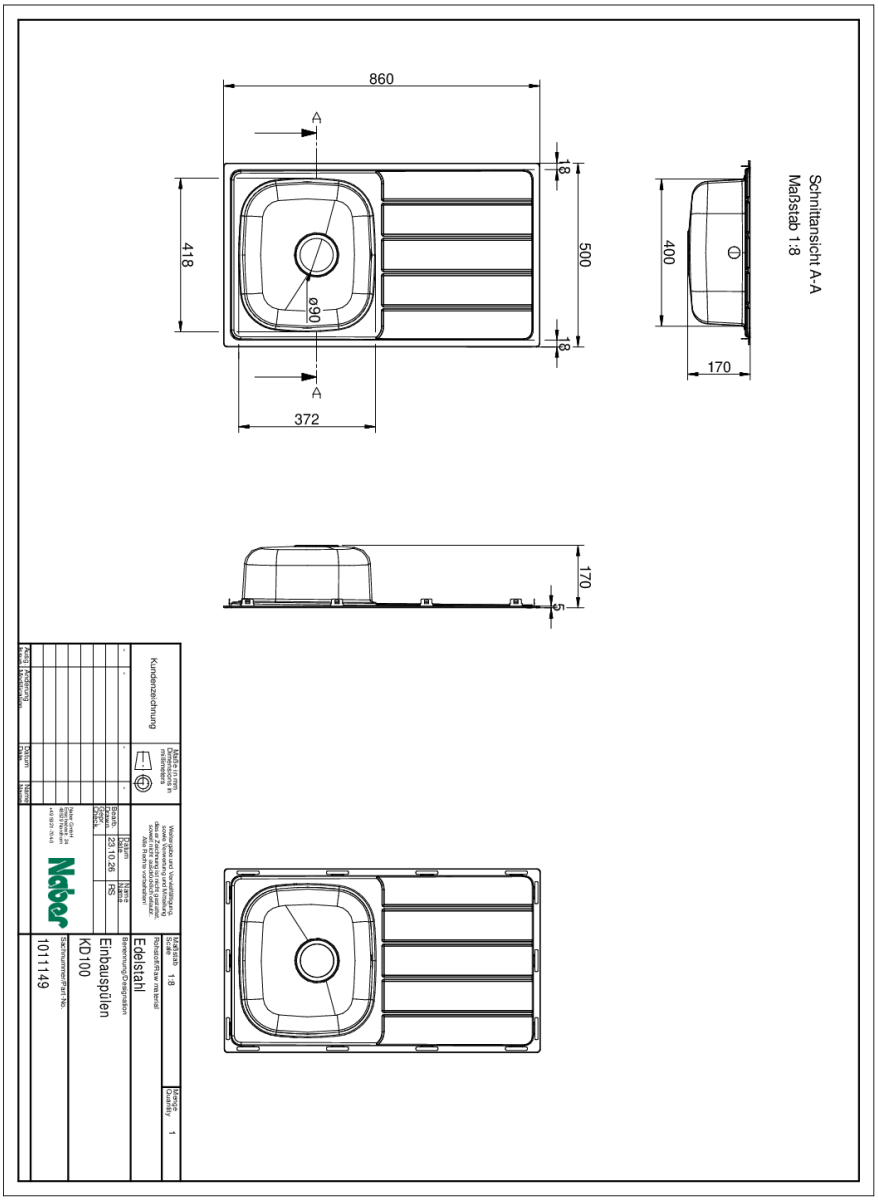

Installation dimensions (PDF)

