

KWC Luna K2

Product number: 5022246
Configuration: chrome, low pressure

Configuration options
5022243 | chrome, high pressure
5022245 | black matt, high pressure
5022246 | chrome, low pressure

✓ Sink faucet
✓ low pressure

Single lever faucet. With **swivelling/pull-out** hose with shower head (can be switched to stream or shower) and ceramic cartridge.
— swivel range 130°
— drill Ø 35 mm

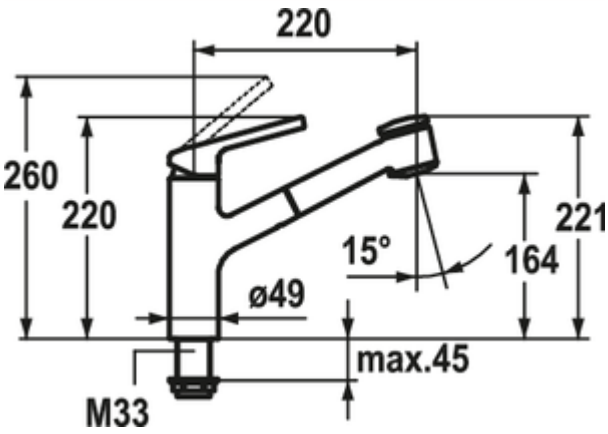

BELGAQUA

SWISS MADE

KERAMISCHE DICHTUNG

more infos...

Technical data

Article type	Sink faucet	Swivel range outlet	130°
Brand	KWC	Type of fitting	Single lever faucet
Number of handles	1	Operating pressure	low pressure
Total installation height	220 mm	Width	49 mm
Height	220 mm	Material	Zamak (zinc die-cast)
Outreach	220 mm	Worktop thickness	45 mm
Discharge height	164 mm	Number of tap holes	1
Operating mode	Lever	Convertible jet/shower	Yes
Drilling diameter	35 mm	Angle of inclination of aerator	15 °
Handle position	top	Temperature adjustable	Yes
Cartridge with ceramic sealing discs	Yes	Type of hose shower	with swivelling/pull-out hose with shower head (can be switched to stream or shower)

Dimensional sketch (PDF)

