

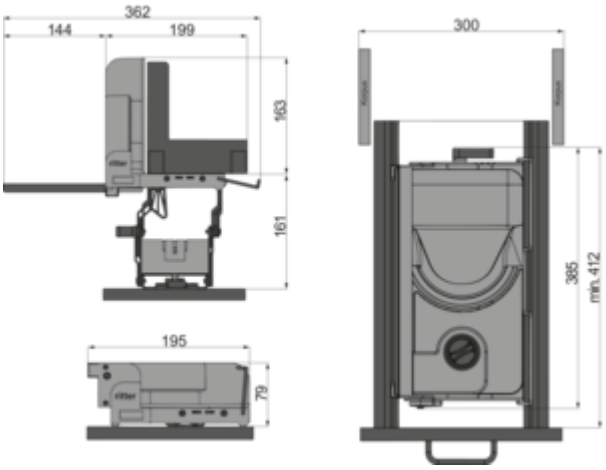

ritter multi-cutter model AES 52

Product number: 1111043
Configuration: silver-metallic, cuttings guided on the right

Configuration options
1111043 | silver-metallic, cuttings guided on the right

✓ Electric slicer
✓ serrated
✓ fold-in lock when slicethickness set

For installation in drawers **from 300 mm cabinet width**. Prerequisite: clear internal dimension >197 mm. Stands in front of the worktop.
— drive: high-performance motor 230 V, 65 watt, safety, brief and continuous operation switch, short-time operation 5 minutes.
— metal design
— round blade: polished blade, Ø 170 mm, with serrated edge
— cutting thickness setting: up to approx. 14 mm
— fold-in lock when slice thickness set
— stand fitting locks automatically
— device can be removed from the draw without tools for cleaning
— cable length 800 mm
— 79 x 195 x 385 mm (H x W x D), poids 4.3 kg
— accessories: cuttings tray, plastic
— 5 years manufacturer's warranty https://www.ritterwerk.de/garantie

more infos...

Technical data

Article type	Electric slicer
Height	79 mm
Width	195 mm
Material	metal
Mains voltage	230 V
Power	65 watts
Drive	high-performance energy-saving motor 230 V, 65 watt, safety, brief and continuous operation switch, short-time operation 5 minutes
Operating mode	Cable

Safety functions	fold-in lock when slicethickness set set-up fitting locks automatically
Material drip tray	plastic
Cut thickness	14 mm
Diameter knife	170 mm
Cutting material	cuttings guided on the right
Cut type knife	serrated
More parts	cuttings tray