

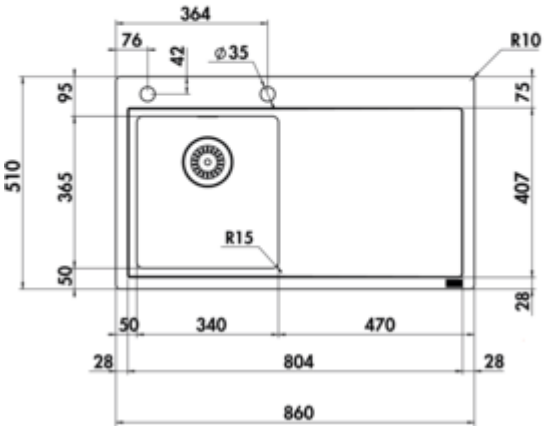

Corno Ora

Product number: 1014041
Configuration: bac/gauche, bowl left

Configuration options

1014040 | stainless steel, bowl right
1014041 | bac/gauche, bowl left
1041126 | set (bowl right and Arco 1)
1041127 | set (bowl left and Arco 1)

✓ Built-in sink
✓ Flush mounted sink
✓ Eccentric set

Built-in sink. With draining surface. 3½" basket strainer valve flush, rotational knob ex-center fitting.

Flat edge: also suitable for flush installation

— suitable for worktop thicknesses from 30 mm to 40 mm
— cut-out dimensions ca. 480 x 490 mm (built-in sink)







more infos...

Technical data

Article type	Sink	Flushing radius (R)	10
Height	307 mm	Maximum worktop material thickness	40 mm
Width	860 mm	Material thickness worktop minimum	30 mm
Material	stainless steel	Number of tap holes	1
Cabinet width	450 mm	Armature bench	Yes
Cut-out dimension	approx. 840 x 490 mm (built-in sink)	Number of holes	1
Excenter fitting	Eccentric set	Arrangement sinks	Bowl left
Valve type	3½" basket strainer valve flush	Number of sinks	1 main sink
Overflow	Overflow in the main basin	Number of overflow points	1
Installation variant	Built-in sink Flush mounted sink	Draining board	With smooth draining surface
Main sink width	340 mm	Garnish actuation	Push-button eccentric
Height main sink	201 mm	Pelvic inner radius (R)	15
Depth main sink	365 mm		

Spare Parts

1014044	Rotational knob excenter fitting, Accessory, stainless steel, for Corno Ora

Naber GmbH
Enschedestr. 24
DE-48529 Nordhorn

Tel. +49 5921 704-0
Fax +49 5921 704-140
naber@naber.com

Recommendations

5011250	Arco 1, Sink faucet, chrome, high pressure

Naber GmbH
Enschedestr. 24
DE-48529 Nordhorn

Tel. +49 5921 704-0
Fax +49 5921 704-140
naber@naber.com

Dimensional sketch (PDF)

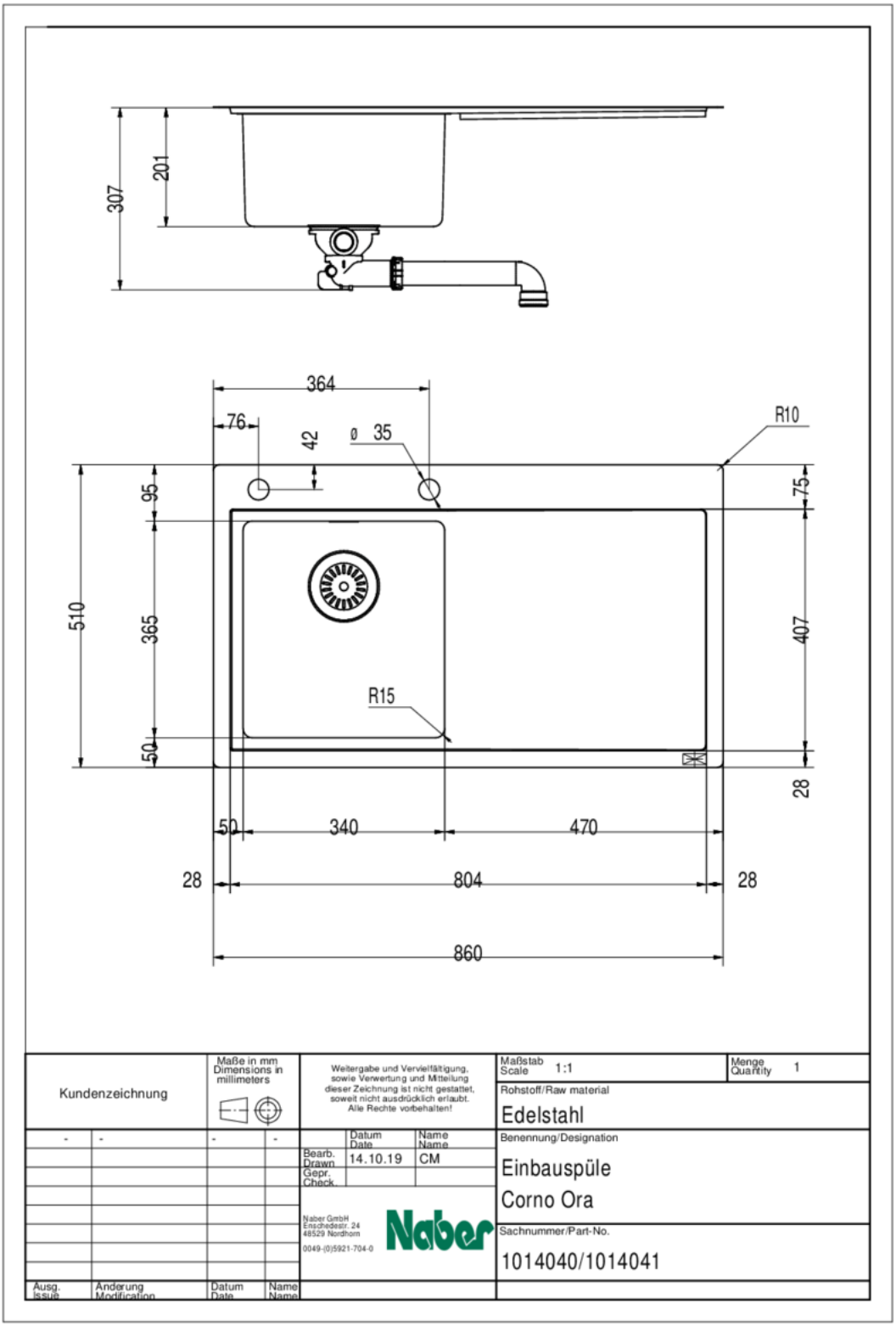

Installation dimensions (PDF)

