

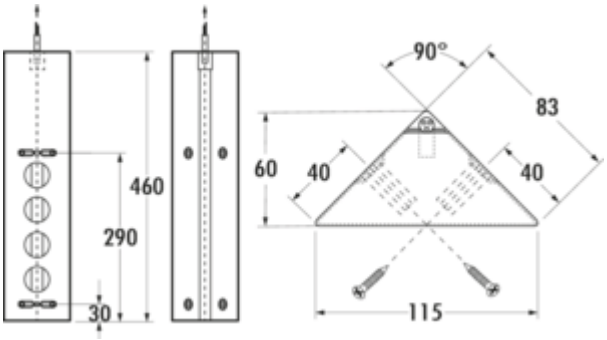

Mira ES1

Product number: 7053045
Configuration: stainless steel

Configuration options
7053045 | stainless steel
7053235 | black matt

✓ Corner socket element
✓ 4 x earthed plug socket
✓ angular

Corner socket element. 4-fold. With telescopic intermediate piece without end caps.
— 240 V/16 A
— 460–580 x 83 x 83 mm (H x W x D)
— 2000 mm mains connection line with earthing contact plug enclosed loosely
— cable outlet back top

more infos...

Technical data

Article type	Socket element
Height	460 - 580 mm
Width	83 mm
Mains voltage	240 V/16 A
Plug type	Angle plug
Cable outlet	cable outlet back top
Properties	rust-free
Mounting/Fixing	Corner mounting
Material housing	stainless steel
Certification	CE

Shape	angular
Length of the supply line (primary)	2.000 mm
Telescopic function	With telescopic intermediate piece without end caps
Version sockets	4 x earthed plug socket
Housing colour	Stainless steel
Mains plug loosely enclosed	Yes
Colour socket	black
Type of socket element	Corner socket element
Number of sockets (total)	4
Touch protection ("child safety lock")	without increased contact protection