Cox® Base 360 S/500-3 with Base-Board

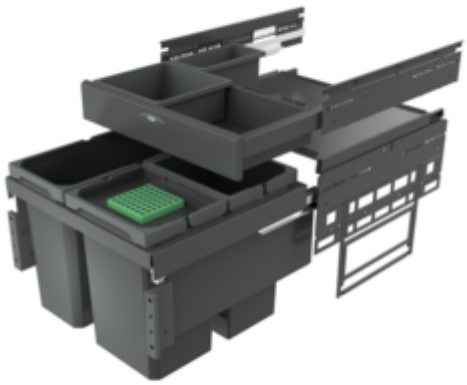

Product number: 8013372
Configuration: with bio lid, anthracite, H 460 mm

Configuration options

8012371 | without bio lid, light grey, H 460 mm
8012372 | with bio lid, light grey, H 460 mm
8013371 | without bio lid, anthracite, H 460 mm
8013372 | with bio lid, anthracite, H 460 mm

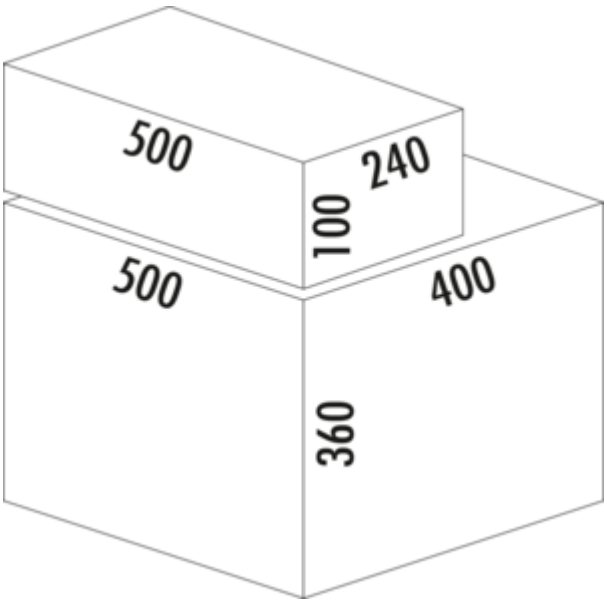

- ✓ Front pull-out system
- ✓ full pull-out
- ✓ 36 l
- — guide rail depth 470 mm
- — waste capacity 36 (2 x 10/1 x 16) l
- — technology: full pull-out
- — fitting: cabinet wall and front panel
- — for 16/19 mm side walls
- — **with soft retraction and damping**
- — **1 x 2.7 l and 1 x 1.2 l storage boxes and 4 brackets included**

more infos...

Naber GmbH
Enschedestr. 24
DE-48529 Nordhorn

Tel. +49 5921 704-0
Fax +49 5921 704-140
naber@naber.com

Technical data

Article type	Waste collection system
Height	460 mm
Width	500 mm
Mounting/Fixing	cabinet wall front panel
Installation_height_list	460 mm
Cabinet width	500 mm
Shape	angular
For sidewall thickness	16/19 mm
Installation depth	400 mm
Material container	plastic
Cover	Yes
Number of containers	2
Opening technology	full pull-out
Total volume	36 l

Volume/content container 1	16 l
Volume/content container 2	10 l
Volume/content container 3	10 l
Soft closing	Yes
Colour container lid	anthracite/green
Design	Front pull-out system
Volume/Content container	10/10/16
Organic lid	Yes
Number of containers in additional drawer	2
Guide rail depth	470 mm
Volume/capacity drawer container 1	2.7 l
Volume/capacity drawer container 2	1,2 l
Biode lid bucket sizes	10 l
Locking mechanism	With damper

Spare Parts

8011178	Bio-filter retrofitting set, Accessory, black
8012320	Cox® system container, Single bucket, light grey, 10 l
8012321	Cox® system container, Single bucket, light grey, 16 l
8010145	Complete lid, Accessory, silver
8012362	Storage box, Utensil box, dark grey, 2.7 l
8013362	Storage box, Utensil box, anthracite, 2.7 l
8012363	Storage box, Utensil box, dark grey, 1.2 l
8013363	Storage box, Utensil box, anthracite, 1.2 l
8012364	Bracket for storage box, Accessory, silver

Dimensional sketch (PDF)

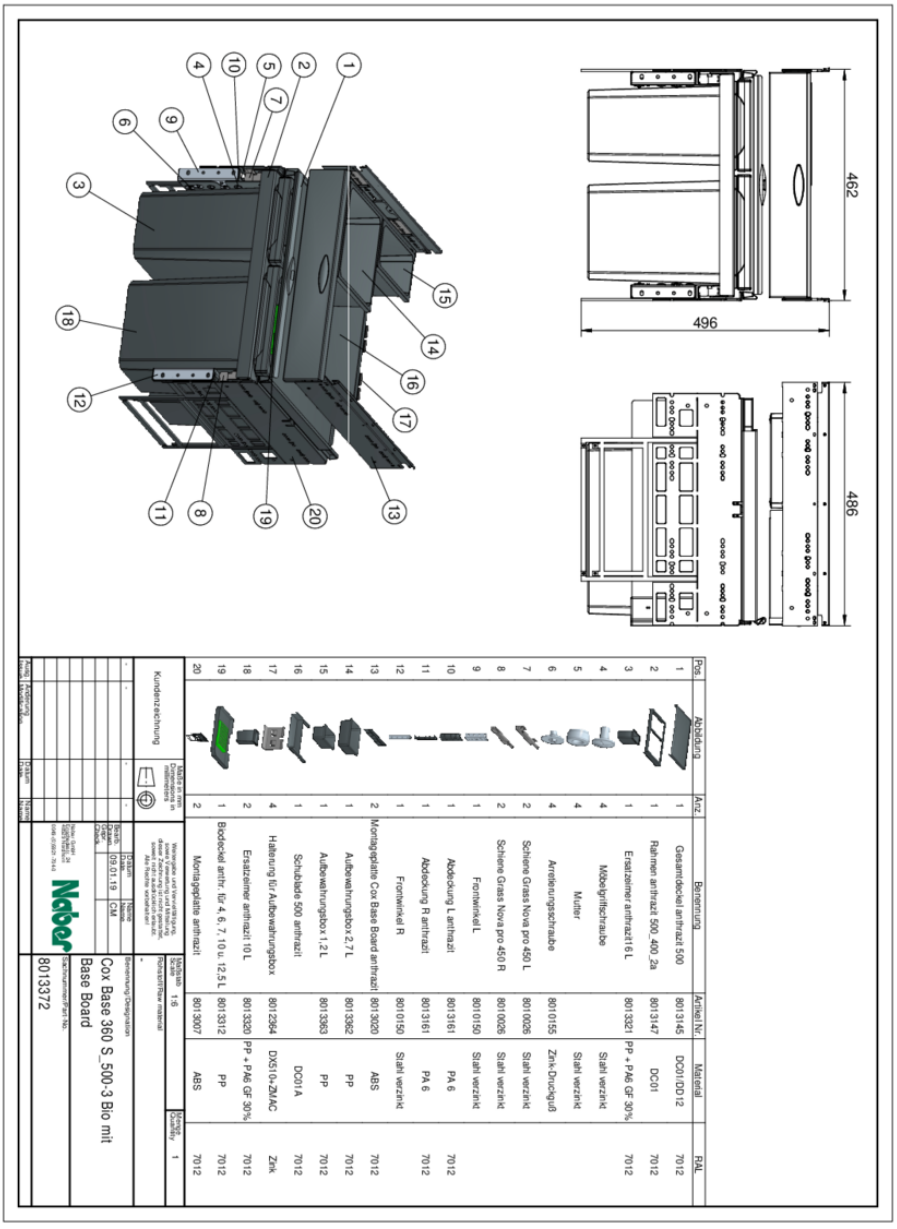

Pos	Abbildung	Anz.	Benennung	Artikel Nr.	Material	RAL
1		1	Gesamtdeckel anthrazit 500	8013145	DC01/DD12	7012
2		1	Rahmen anthrazit 500_400_2a	8013147	DC01	7012
3		1	Ersatzeimer anthrazit 16 L	8013321	PP + PA6 GF 30%	7012
4		4	Möbelgriffschraube		Stahl verzinkt	
5		4	Mutter		Stahl verzinkt	
6		4	Anreisenungsschraube	8010155	Zink-Druckguß	
7		2	Schiene Grass Nova pro 450 L	8010026	Stahl verzinkt	
8		2	Schiene Grass Nova pro 450 R	8010026	Stahl verzinkt	
9		1	Frontwinkel L	8010150	Stahl verzinkt	
10		1	Abdeckung L anthrazit	8013161	PA 6	7012
11		1	Abdeckung R anthrazit	8013161	PA 6	7012
12		1	Frontwinkel R	8010150	Stahl verzinkt	
13		2	Montageplatte Cox Base Board anthrazit	8013020	ABS	7012
14		1	Aufbewahrungsbox 2,7 L	8013362	PP	7012
15		1	Aufbewahrungsbox 1,2 L	8013363	PP	7012
16		1	Schublade 500 anthrazit	8013160	DC01A	7012
17		4	Halterung für Aufbewahrungsbox	8012264	DX51D+ZM/AC	Zink
18		2	Ersatzeimer anthrazit 10 L	8013320	PP + PA6 GF 30%	7012
19		1	Biodeckel anthr. für 4, 6, 7, 10 u. 12,5 L	8013312	PP	7012
20		1	Montageplatte anthrazit	8013007	ABS	7012

Kundenzeichnung

Maße in mm
Dimensions in millimeters

Maßstab 1:6
Scale/Echelle

Benennung/Designation

Cox Base 360 S_500-3 Bio mit Base Board

Sachnummer/Part No.

8013372

Menge/Quantity 1

Naber GmbH
Enschedestr. 24
DE-48529 Nordhorn

Tel. +49 5921 704-0
Fax +49 5921 704-140
naber@naber.com

naber.com