

LINEA Fuoco 1

Product number: 5011323
Configuration: stainless steel finish, low pressure

Configuration options
5011320 | chrome, high pressure
5011321 | chrome, low pressure
5011322 | stainless steel finish, high pressure
5011323 | stainless steel finish, low pressure
5011326 | black matt, high pressure
5011327 | black matt, low pressure

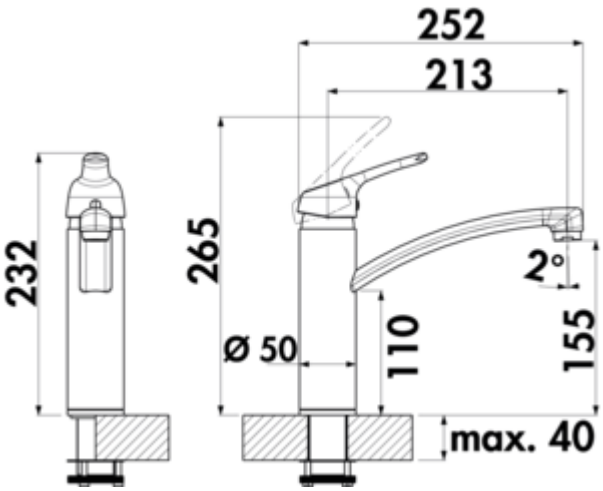

✓ Sink faucet
✓ low pressure
✓ with swivelling outlet

Single lever mixer. With swivelling outlet, laminar aerator and ceramic cartridge.
— swivel range 360°
— drill Ø 35 mm
— corresponds to the German and European drinking water regulation/directive

BELGAQUA

KERAMISCHE DICHTUNG

more infos...

Technical data

Article type	Sink faucet	Swivel range outlet	360°
Brand	LINEA	Type of fitting	Single lever faucet
Number of handles	1	Operating pressure	low pressure
Total installation height	232 mm	Width	50 mm
Height	232 mm	Material	brass
Outreach	213 mm	Worktop thickness	40 mm
Outlet	with swivelling outlet	Number of tap holes	1
Discharge height	155 mm	Cartridge size	35 mm
Operating mode	Lever	Angle of inclination of aerator	2 °
Drilling diameter	35 mm	Connection type	G 3/8“ F
Handle position	top	Connection size	DN 15
Cartridge with ceramic sealing discs	Yes	Connection hoses	600 mm

Dimensional sketch (PDF)

