

Ideal Standard Cerafit 1

Product number: 5024150
Configuration: chrome, high pressure

Configuration options
5024150 | chrome, high pressure
5024151 | chrome, low pressure

✓ Washbasin tap
✓ high pressure
✓ with swivelling outlet

Single lever faucet. With swivelling outlet and ceramic cartridge.
— swivel range 360°
— drill Ø 35 mm

German Engineering

KERAMISCHE DICHTUNG

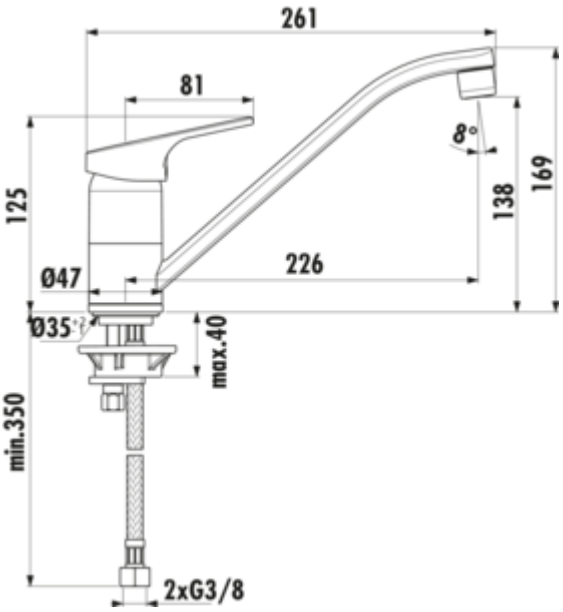

more infos...

Technical data

Article type	Washbasin tap	Swivel range outlet	360°
Brand	Ideal Standard	Type of fitting	Single lever faucet
Number of handles	1	Operating pressure	high pressure
Total installation height	169 mm	Width	47 mm
Height	169 mm	Material	brass
Outreach	226 mm	Worktop thickness	40 mm
Outlet	with swivelling outlet	Number of tap holes	1
Discharge height	138 mm	Cartridge size	38 mm
Operating mode	Lever	ECO function	Water saving function
Drilling diameter	35 mm	Temperature limiter/scald protection	Yes
Handle position	top	Angle of inclination of aerator	8 °
Lever length	81 mm	Flow rate at 3 bar (cold)	9 l/min
Cartridge with ceramic sealing discs	Yes		