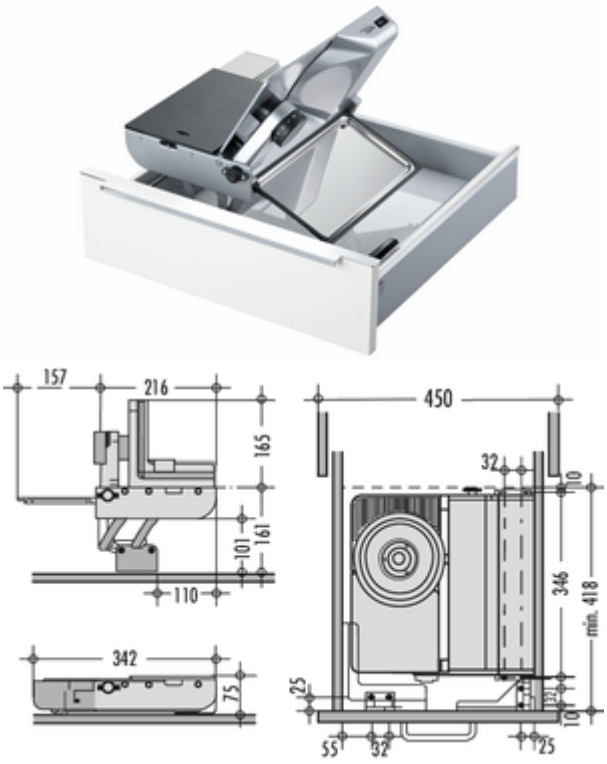

ritter multi-cutter model AES 62

Product number: 1111051
Configuration: silver-metallic, cuttings guided on the left

Configuration options
1111051 | silver-metallic, cuttings guided on the left
1111062 | silver-metallic, cuttings guided on the right

✓ Electric slicer
✓ serrated
✓ fold-in lock when slicethickness set

For installation in drawers from 450 mm cabinet width. Prerequisite: clear internal dimension: >344 mm. Stands in front of the worktop. Distance from drawer bottom to upper worktop edge: min. 116 mm, max. 161 mm.
— drive: high-performance motor 230 V, 65 watt, safety-brief and continuous operation switch, short-time operation 5 minutes
— metal design
— round blade: polished blade Ø 170 mm, with serrated edge
— cutting width adjustment: up to approx. 14 mm
— fold-in lock when slicethickness set
— stand fitting locks automatically
— cable length 800 mm
— 75 x 342 x 365 mm (H x W x D), weight: 4.1 kg
— accessories: cuttings tray made of stainless steel, fixing bracket for finger protection and left-overs holder
— 5 years manufacturer's warranty https://www.ritterwerk.de/garantie

more infos...

Technical data

Article type	Electric slicer
Height	75 mm
Width	342 mm
Material	metal
Mains voltage	230 V
Power	65 watts
Drive	high-performance energy-saving motor 230 V, 65 watt, safety, brief and continuous operation switch, short-time operation 5 minutes
Operating mode	Cable

Safety functions	fold-in lock when slicethickness set set-up fitting locks automatically
Material drip tray	stainless steel
Cut thickness	14 mm
Diameter knife	170 mm
Cutting material	cuttings guided on the left
Cut type knife	serrated
More parts	cuttings tray fixing bracket for finger protection and left-overs holder