

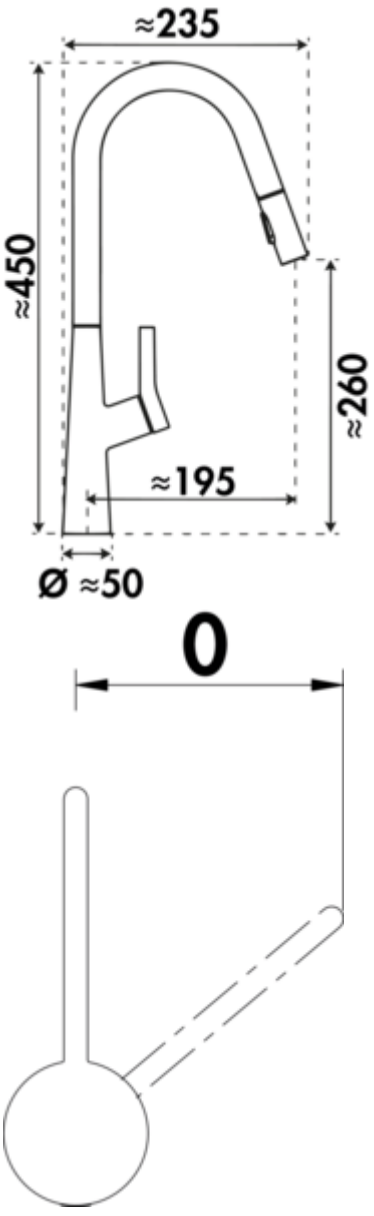

Wasserwerk Bendea

Product number: 5021324
Configuration: stainless steel coloured, high pressure

Configuration options
5021324 | stainless steel coloured, high pressure
5021325 | black matt, high pressure
5021326 | brushed-gold, high pressure
5021327 | graphite matt, high pressure

✓ Sink faucet
✓ high pressure
✓ with swivelling/pull-out outlet (can be switched to stream or shower)

Single lever faucet. With **swivelling/pull-out** outlet (can be switched to stream or shower), side lever, ceramic cartridge.
— cold-start function: In the center position, only cold water flows, avoiding unnecessary heating
— swivel range 360°
— drill Ø 35 mm

BELGAQUA

MADE IN GERMANY

KERAMISCHE DICHTUNG

Naber GmbH
Enschedestr. 24
DE-48529 Nordhorn

Tel. +49 5921 704-0
Fax +49 5921 704-140
naber@naber.com

more infos...

Technical data

Article type	Sink faucet
Brand	Wasserwerk
Number of handles	1
Height	450 mm
Outreach	235 mm
Outlet	with swivelling/pull-out outlet (can be switched to stream or shower)
Discharge height	260 mm
Operating mode	Lever
Drilling diameter	35 mm
Handle position	side lever
Cartridge with ceramic sealing discs	Yes
Swivel range outlet	360°

Beam type	Comfort beam Shower jet
Type of fitting	Single lever faucet
Operating pressure	high pressure
Width	50 mm
Certification	Belgaqua
Swivel range handle	0 °
Number of tap holes	1
Cartridge size	25 mm
ECO function	energy-saving cold start function
Convertible jet/shower	Yes
Length shower hose	1.500 mm
Connection hoses	500 mm