

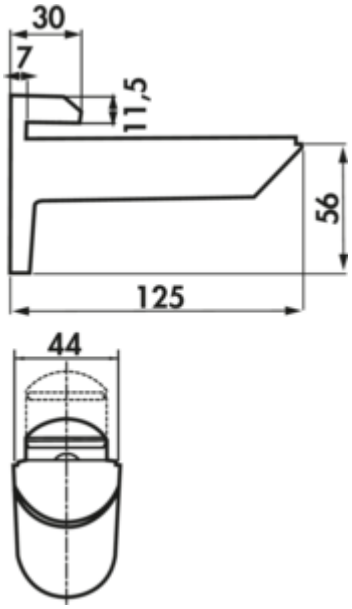


# Kaiman

Product number: 3021078
Configuration: stainless steel coloured

**Configuration options**
3021078 | stainless steel coloured
3021092 | black matt

✓ Shelf support
Shelf support.
— for plate thickness of 7–41 mm
— load-bearing capacity ca. 25 kg/supports for a depth of 320 mm
— bracket length 125 mm
— **only available in units of 2 pieces**

Order glass shelves separately.

**more infos...**

## Technical data

| | |
|---|---|
| Article type | Shelf support |
| Height | 56 mm |
| Width | 125 mm |
| Mounting/Fixing | Wall mounting |

| | |
|---|---|
| Note | only available in units of 2 pieces<br>Order glass shelves separately. |
| Further | No problem with slanted walls: Integrated mechanics enable uncomplicated tilt adjustment of "Kaiman" |
| Carrying capacity | load-bearing capacity ca. 25 kg/ supports for a depth of 320 mm |
| Suitable panel thickness | 7–41 mm |