

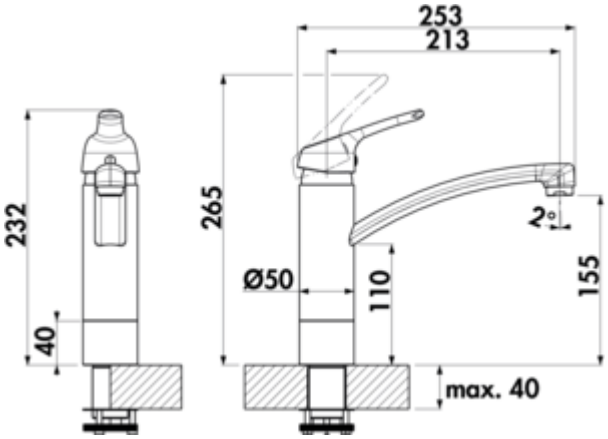


# LINEA Fuoco 5 window fitting

Product number: 5011328
Configuration: black matt, high pressure

**Configuration options**
5011324 | chrome, high-pressure
5011325 | stainless steel finish, high pressure
5011328 | black matt, high pressure

✓ Sink faucet
✓ high pressure
✓ with swivelling outlet

Single lever mixer. With swivelling outlet, laminar aerator and ceramic cartridge.
— **height when tilted only 50 mm**
— swivel range 360°
— drill Ø 35 mm
— corresponds to the German and European drinking water regulation/directive

BELGAQUA

KERAMISCHE DICHTUNG

more infos...

## Technical data

| | | | |
|---|---|---|---|
| Article type | Sink faucet | Operating pressure | high pressure |
| Brand | LINEA | Width | 50 mm |
| Number of handles | 1 | Material | brass |
| Total installation height | 232 mm | Surface/coating | powder coated |
| Height | 232 mm | Worktop thickness | 40 mm |
| Outreach | 213 mm | Window fitting | Yes |
| Outlet | with swivelling outlet | Number of tap holes | 1 |
| Discharge height | 155 mm | Cartridge size | 35 mm |
| Operating mode | Lever | Convertible jet/shower | No |
| Drilling diameter | 35 mm | Height tilted | 50 mm |
| Handle position | top | Angle of inclination of aerator | 2 ° |
| Cartridge with ceramic sealing discs | Yes | Connection type | G 3/8“ F |
| Swivel range outlet | 360° | Connection size | DN 15 |
| Type of fitting | Single lever faucet | Connection hoses | 900 mm |

## Dimensional sketch (PDF)

